Chipsmall Limited consists of a professional team with an average of over 10 year of expertise in the distribution of electronic components. Based in Hongkong, we have already established firm and mutual-benefit business relationships with customers from,Europe,America and south Asia,supplying obsolete and hard-to-find components to meet their specific needs.

With the principle of “Quality Parts,Customers Priority,Honest Operation,and Considerate Service”,our business mainly focus on the distribution of electronic components. Line cards we deal with include Microchip,ALPS,ROHM,Xilinx,Pulse,ON,Everlight and Freescale. Main products comprise IC,Modules,Potentiometer,IC Socket,Relay,Connector.Our parts cover such applications as commercial,industrial, and automotives areas.

We are looking forward to setting up business relationship with you and hope to provide you with the best service and solution. Let us make a better world for our industry!

Contact us

Tel: +86-755-8981 8866 Fax: +86-755-8427 6832
Email & Skype: info@chipsmall.com Web: www.chipsmall.com
Address: A1208, Overseas Decoration Building, #122 Zhenhua RD., Futian, Shenzhen, China

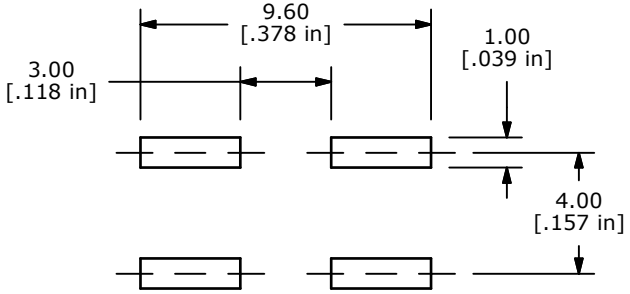

RECOMMENDED P.C.B. LAYOUT

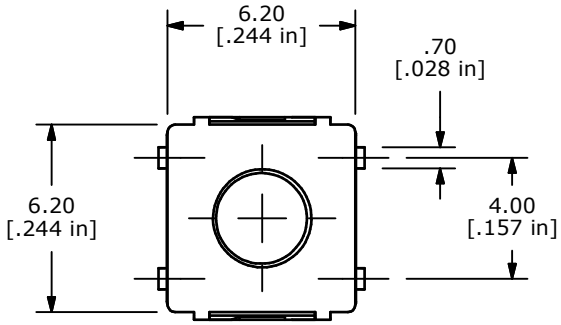

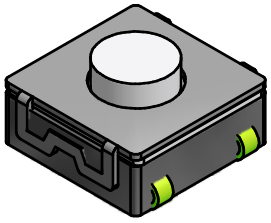

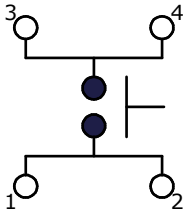

CIRCUIT: SPST

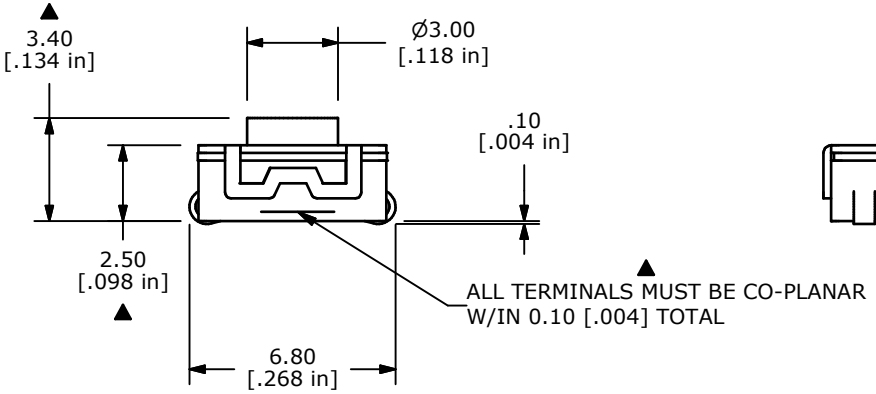

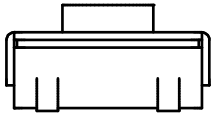

NOTES:
1. ALL DIMENSIONS IN MM [INCH]
2. GENERAL TOLERANCE: x.x=± 0.4
   x.xx=± 0.25
3. TERM. NOS. FOR REF. ONLY
4. RATING: 50mA, @12V DC
5. ▲ OPERATING FORCE: 260 ± 50gf
6. TRAVEL: 0.25 +0.2/-0.1MM
7. CONTACT RESISTANCE: 100 mΩ MAX. E
8. PACKAGING: TAPE AND REEL, 1600 PCS PER REEL
9. ▲ CONTACT MATERIAL: SILVER
10. ▲ DENOTES CRITICAL PARAMETER
11. 2002/95/EC (ROHS) COMPLIANT
12. MECHANICAL/ELECTRICAL LIFE: 100,000 CYCLES
13. OPERATING TEMPERATURE: -20°C TO 70°C E

REV	PCR NO	DESCRIPTION	DATE	BY
E	21024	100mΩ WAS 100Ω, ADD TEMP NOTE	2/12/13	EBP
D	16712	REVISED AND REDRAWN INVENTOR	11/29/06	TN

THE INFORMATION CONTAINED IN THIS DOCUMENT IS PROPRIETARY TO E-SWITCH AND IS NOT TO BE COPIED OR TRANSFERRED

E-SWITCH

TITLE TL3304AF260QJ

SCALE	DATE	DR	DWG	REV
4:1	11/29/2006	TN	P010544	E