Chipsmall Limited consists of a professional team with an average of over 10 year of expertise in the distribution of electronic components. Based in Hongkong, we have already established firm and mutual-benefit business relationships with customers from,Europe,America and south Asia,supplying obsolete and hard-to-find components to meet their specific needs.

With the principle of “Quality Parts,Customers Priority,Honest Operation,and Considerate Service”,our business mainly focus on the distribution of electronic components. Line cards we deal with include Microchip,ALPS,ROHM,Xilinx,Pulse,ON,Everlight and Freescale. Main products comprise IC,Modules,Potentiometer,IC Socket,Relay,Connector.Our parts cover such applications as commercial,industrial, and automotives areas.

We are looking forward to setting up business relationship with you and hope to provide you with the best service and solution. Let us make a better world for our industry!

Contact us

Tel: +86-755-8981 8866 Fax: +86-755-8427 6832
Email & Skype: info@chipsmall.com Web: www.chipsmall.com
Address: A1208, Overseas Decoration Building, #122 Zhenhua RD., Futian, Shenzhen, China

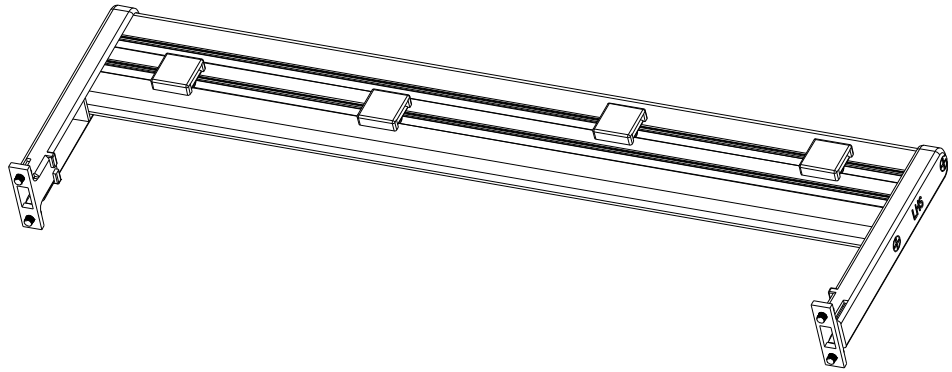

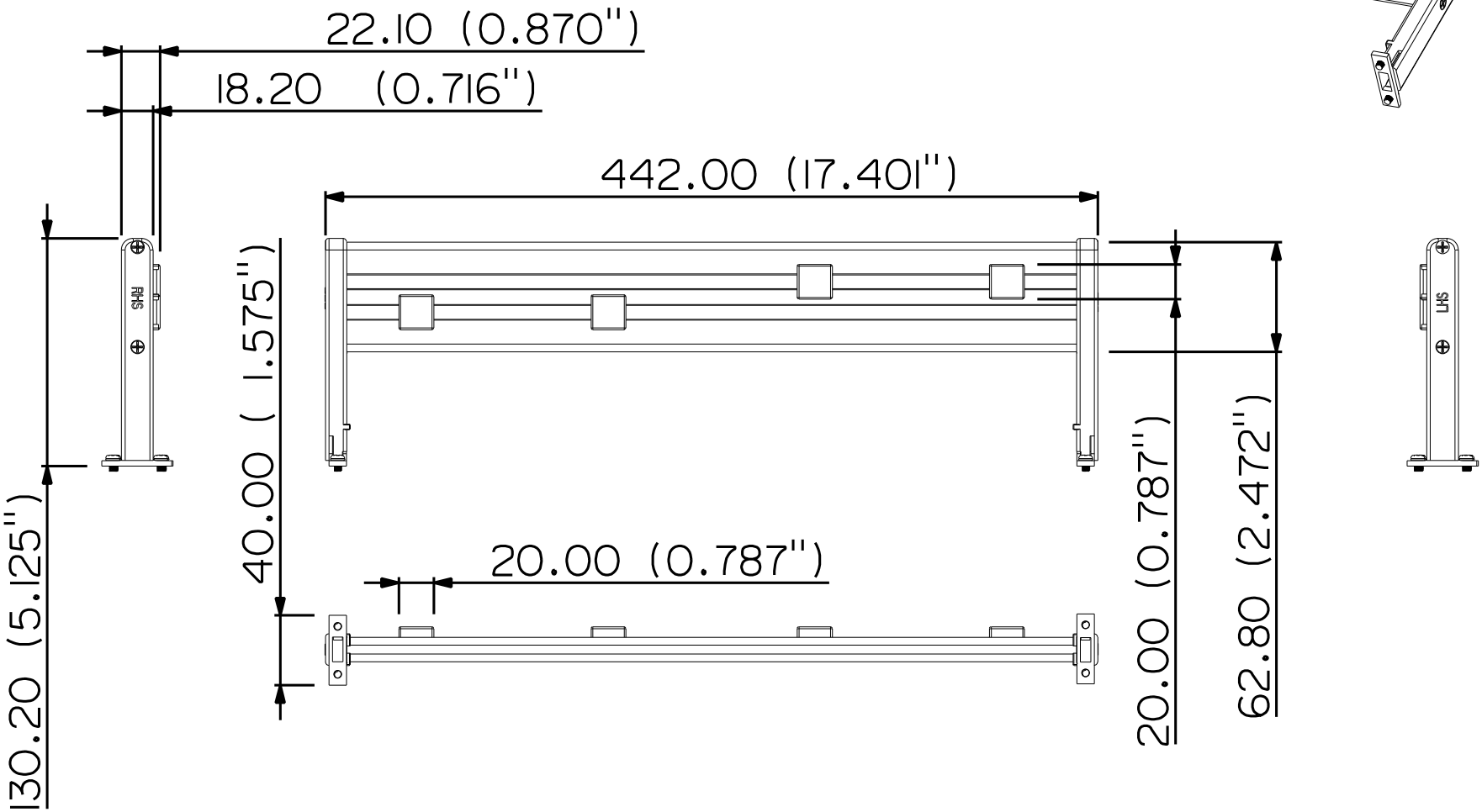

INVENTORS	HellermannTyton Cable Management Products		
	ALL PROPRIETARY RIGHTS IN THE SUBJECT MATTER SHOWN ON THIS DRAWING ARE EXCLUSIVE PROPERTY OF HELLERMANNTYTON		
	name	date	city, state
	HT DATA	13/09/05	NORTHAMPTON U.K
REVISION	DRAWING level 1	by	date
	ECN #	part level	
DIMENSIONS	TOLERANCES .XXXX: ±0.001	.XXX: ±0.010	.XX: ±0.02
	.X: ±0.1	∠: ±0.5	unless otherwise specified
	units mm/inches		
PART	number TRCMA/BK	phase PRODUTION	
	name ALPHA SNAP HD CABLE MANAGEMENT		
	material N/A		
DRAWING	format A4 version J	CAD PRO-E	scale 0.300
	computer file number	previous number	
	drawn G MAY 13/09/05	checked	approved
	type	sheet 1 of 1	
	number P126-026		