Chipsmall Limited consists of a professional team with an average of over 10 year of expertise in the distribution of electronic components. Based in Hongkong, we have already established firm and mutual-benefit business relationships with customers from,Europe,America and south Asia,supplying obsolete and hard-to-find components to meet their specific needs.

With the principle of “Quality Parts,Customers Priority,Honest Operation,and Considerate Service”,our business mainly focus on the distribution of electronic components. Line cards we deal with include Microchip,ALPS,ROHM,Xilinx,Pulse,ON,Everlight and Freescale. Main products comprise IC,Modules,Potentiometer,IC Socket,Relay,Connector.Our parts cover such applications as commercial,industrial, and automotives areas.

We are looking forward to setting up business relationship with you and hope to provide you with the best service and solution. Let us make a better world for our industry!

Contact us

Tel: +86-755-8981 8866 Fax: +86-755-8427 6832
Email & Skype: info@chipsmall.com Web: www.chipsmall.com
Address: A1208, Overseas Decoration Building, #122 Zhenhua RD., Futian, Shenzhen, China

Data Sheet, Revision 2.6, August 2007

TUA 6039-2, TUA 6039, TUA 6037

3 Band Digital / Hybrid Tuner IC with integrated IF AGC amplifier

OmniTune™ TUA 6039-2,
OmniTune™ TUA 6039,
OmniTune™ TUA 6037

Communication Solutions

Never stop thinking

Edition 2007-08-20

Published by
Infineon Technologies AG
81726 München, Germany

Legal Disclaimer

The information given in this document shall in no event be regarded as a guarantee of conditions or characteristics ("Beschaffenheitsgarantie"). With respect to any examples or hints given herein, any typical values stated herein and/or any information regarding the application of the device, Infineon Technologies hereby disclaims any and all warranties and liabilities of any kind, including without limitation warranties of non-infringement of intellectual property rights of any third party.

Information

For further information on technology, delivery terms and conditions and prices please contact your nearest Infineon Technologies Office (**www.infineon.com**).

Warnings

Due to technical requirements components may contain dangerous substances. For information on the types in question please contact your nearest Infineon Technologies Office.

Infineon Technologies Components may only be used in life-support devices or systems with the express written approval of Infineon Technologies, if a failure of such components can reasonably be expected to cause the failure of that life-support device or system, or to affect the safety or effectiveness of that device or system. Life support devices or systems are intended to be implanted in the human body, or to support and/or maintain and sustain and/or protect human life. If they fail, it is reasonable to assume that the health of the user or other persons may be endangered.

Data Sheet, Revision 2.6, August 2007

TUA 6039-2, TUA 6039, TUA 6037

3 Band Digital / Hybrid Tuner IC with integrated IF AGC amplifier

OmniTune™ TUA 6039-2,
OmniTune™ TUA 6039,
OmniTune™ TUA 6037

Communication Solutions

Never stop thinking

TUA 6039-2, TUA 6039, TUA 6037

Revision History:	**2007-08-20**	**Data Sheet, Revision 2.6**
Previous Version:	2006-10-31	Data Sheet, Revision 2.5

Page	Subjects (major changes since last revision)
all	Branding name changed to OmniTune™. OmniTune™ TUA 6039-2 included in data sheet. Formatting of document cross-references updated.
9	TUA 6039 Ordering Code corrected. New Ordering Code for TUA 6037.
9 - 11	DMB-TH standard added.
19 - 22	Average DC voltage corrected for X_TAL_CAP, OSCLOWOUT and OSCLOWIN.
25	Functional Block Diagram updated. Functional Block Diagram for TUA 6037 added. Functional Description of PLL block updated. Functional Description added for ADC.
37 - 48	Tuning voltage leakage current, maximum limit added. Phase Noise Parameter, maximum limit added. Footnotes of **Table 7** updated

We Listen to Your Comments

Any information within this document that you feel is wrong, unclear or missing at all? Your feedback will help us to continuously improve the quality of this document. Please send your proposal (including a reference to this document) to:

horst.klein@infineon.com

Table of Contents

List of Tables

List of Figures

1 Product Info

General Description

The **TUA 6039-2, TUA 6039, TUA 6037** device combines a mixer-oscillator function and an IF AGC amplifier with a digitally programmable phase locked loop (PLL) for use in analog and digital terrestrial applications.

Features

General

- Supply voltage 3 to 5.5 Volt
- Narrowband RF AGC detector for internal tuner with
  - 5 programmable take over points
  - 2 programmable time constants
  - RF AGC buffer output
- Low phase noise
- Full ESD protection
- Qualified according to JEDEC for consumer applications

Mixer/Oscillator

- Three band tuner
- Unbalanced highohmic LOW input
- Balanced lowohmic MID input
- Balanced lowohmic HIGH input
- Two pin oscillators for LOW/MID band
- Four pin oscillator for HIGH band

SAW filter driver and IF-Amplifier

- 4 IF pins to connect a 2 pole bandpass
- Symmetrical SAW filter driver
- Fully balanced IF AGC amplifier

PLL

- I^2C bus
- 4 pin-programmable I^2C addresses
- High voltage VCO tuning output
- 4 PNP ports, 1 NPN port/ADC input[1)]
- Internal LOW/MID/HIGH band switch
- X_TAL 4 MHz, X_TAL buffer output
- 6 reference divider ratios
- 4 charge pump currents

Power management

- Bus controlled power down mode

Application

- The IC is suitable for PAL, NTSC, SECAM, DVB-C, DVB-T, T-DMB, DMB-TH, DAB, ISDB-T, Open Cable and ATSC tuners.

1) ADC function is only available in TUA 6039-2.

Ordering Information

Type	Ordering Code	Package
TUA 6039-2	SP000279216	PG-VQFN-48
TUA 6039	SP000259230	PG-VQFN-48
TUA 6037	SP000274731	PG-VQFN-48

2 Product Description

The **TUA 6039-2, TUA 6039, TUA 6037 'OmniTune™ TUA 6039-2, OmniTune™ TUA 6039, OmniTune™ TUA 6037'** device combines a mixer-oscillator block with a digitally programmable phase locked loop (PLL) and a variable gain IF AGC amplifier for use in TV and VCR tuners, set-top-box and mobile applications. Integrated narrow band RF AGC functions with output buffer are provided.

The mixer-oscillator block includes three balanced mixers (one mixer with an unbalanced high-impedance input and two mixers with a balanced low-impedance input), two 2-pin asymmetrical oscillators for the LOW and the MID band, one 4-pin symmetrical oscillator for the HIGH band, a reference voltage and a band switch. The mixer output signal passes a SAW filter driver and an IF AGC amplifier to provide constant output level ready for A/D sampling.

The PLL block with four pin programmable chip addresses forms a digitally programmable phase locked loop. With a 4 MHz quartz crystal, the PLL permits precise setting of the frequency of the tuner oscillator up to 1024 MHz in increments of 31.25, 50, 62.5, 125, 142.86 or 166.7 kHz. The tuning process is controlled by a microprocessor via an I^2C bus. A flag is set when the loop is locked. The lock flag can be read by the processor via the I^2C bus. The device has 5 output ports and a X_TAL output buffer. One of the ports (P4) can be also used as input for a 5-level A to D converter (only available in TUA 6039-2).

2.1 Features

2.1.1 General

- Supply voltage range 3 to 5.5 V
- Narrowband RF AGC detector for internal tuner with
  - 5 programmable take over points
  - 2 programmable time constants
  - RF AGC buffer output
- Low phase noise
- Full ESD protection
- Qualified according to JEDEC for consumer applications

2.1.2 Mixer/Oscillator

- High impedance mixer input (common emitter) for LOW band
- Low impedance mixer input (common base) for MID band
- Low impedance mixer input (common base) for HIGH band
- 2 pin oscillator for LOW band
- 2 pin oscillator for MID band
- 4 pin oscillator for HIGH band

2.1.3 SAW Filter Driver

- 4 IF pins to connect a 2 pole bandpass
- Symmetrical IF preamplifier with low output impedance able to drive a compensated SAW filter (500 Ω//40 pF)

2.1.4 IF AGC Amplifier

- Symmetrical variable gain IF output amplifier with low noise, high linearity, high dynamic range.

2.1.5 PLL

- 4 pin-programmable I^2C addresses
- I^2C bus protocol compatible with 3.3 V and 5 V micro-controllers up to 400 kHz
- High voltage VCO tuning output
- 4 PNP ports
- 1 NPN port/ADC input[1)]
- Power down mode
- Internal LOW/MID/HIGH band switch
- Lock-in flag
- 6 programmable reference divider ratios (24, 28, 32, 64, 80, 128)
- 4 programmable charge pump currents

2.2 Application

- The IC is suitable for PAL, NTSC, SECAM, DVB-C, DVB-T, T-DMB, DMB-TH, DAB, ISDB-T, Open Cable and ATSC tuners. The focus is on digital terrestrial.
- The AGC stage makes the tuner AGC independent of the Video-IF AGC.

2.2.1 Recommended band limits in MHz

Table 1 ATSC tuners

	RF input		Oscillator	
Band	**min**	**max**	**min**	**max**
LOW	55.25	157.25	101	203
MID	163.25	451.25	209	497
HIGH	457.25	861.25	503	907

1) ADC function is only available in TUA 6039-2.

Table 2 DVB-T and analog tuners

	RF input		Oscillator	
Band	**min**	**max**	**min**	**max**
LOW	48.25	154.25	87.15	193.15
MID	161.25	439.25	200.15	478.15
HIGH	447.25	863.25	486.15	902.15

Table 3 ISDB-T tuners

	RF input		Oscillator	
Band	**min**	**max**	**min**	**max**
LOW	93	167	150	224
MID	173	467	230	524
HIGH	473	767	530	824

Note: Tuning margin of 3 MHz not included.

3 Functional Description

3.1 Pin Configuration

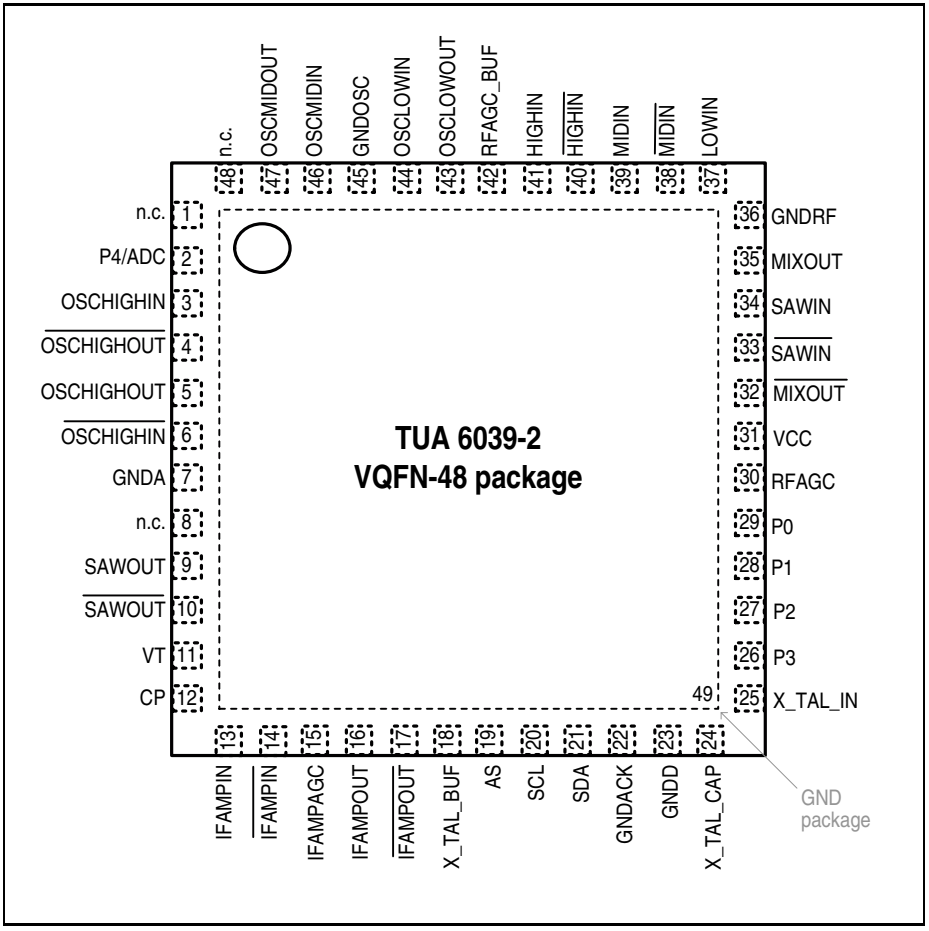

Figure 1 Pin Configuration of TUA 6039-2

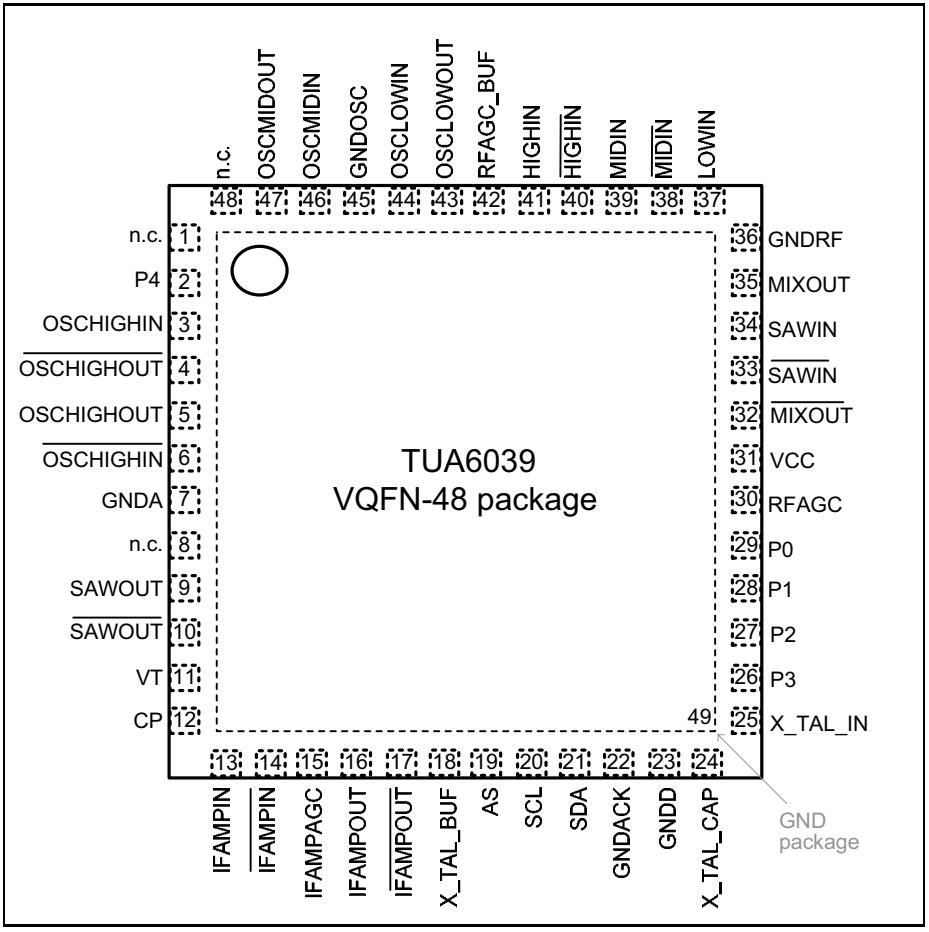

Figure 2 Pin Configuration of TUA 6039

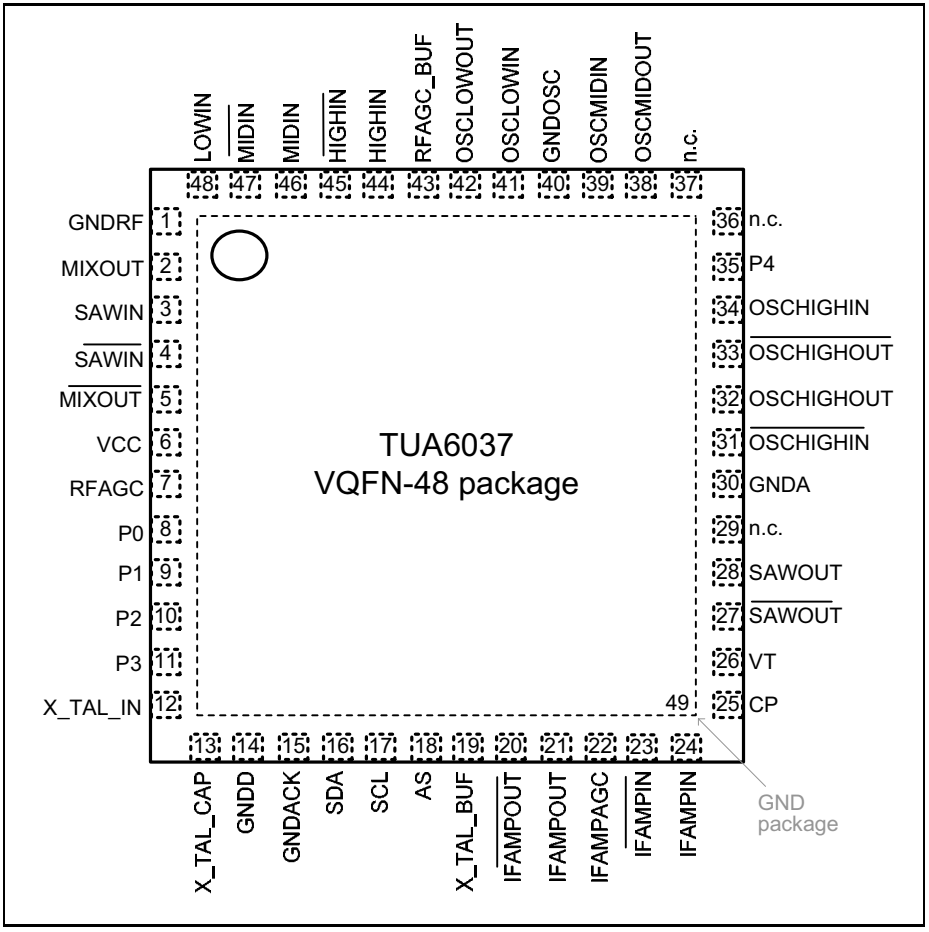

Figure 3 **Pin Configuration of TUA 6037**

3.2 Pin Definition and Functions

Table 4 Pin Definition and Functions

Pin No.[1)]	Symbol	Equivalent I/O Schematic	Average DC voltage at V_{CC} = 3.3V		
			LOW	MID	HIGH
1 (36)	n.c.				
2[2)] 2 (35)	P4/ADC input[2)] P4	P4/ADC input[2)] P4 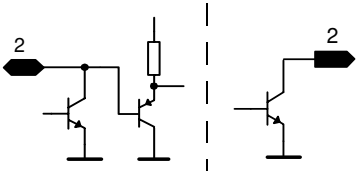	0 V + V_{CE} or V_{CC}	0 V + V_{CE} or V_{CC}	0 V + V_{CE} or V_{CC}
3 (34)	OSCHIGHIN	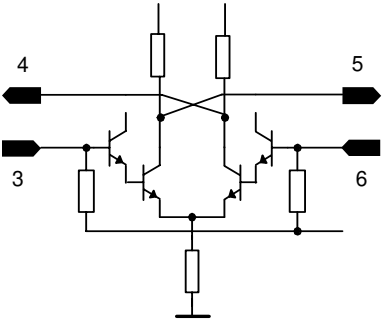			2.3 V
4 (33)	OSCHIGHOUT				2.25 V
5 (32)	OSCHIGHOUT				2.25 V
6 (31)	OSCHIGHIN				2.3 V
7 (30)	GNDA	Analog ground	0 V	0 V	0 V
8 (29)	n.c.				
9 (28)	SAWOUT	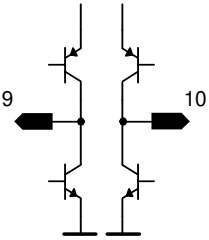	1.6 V	1.6 V	1.6 V
10 (27)	SAWOUT		1.6 V	1.6 V	1.6 V

Pin No.[1)]	Symbol	Equivalent I/O Schematic	Average DC voltage at V_{CC} = 3.3V		
			LOW	MID	HIGH
11 (26)	VT	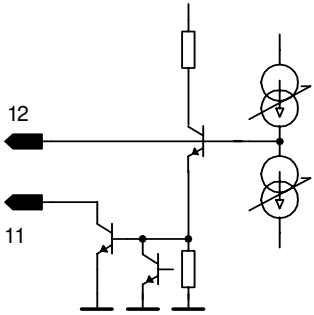	VT	VT	VT
12 (25)	CP		1.4 V	1.4 V	1.4 V
13 (24)	IFAMPIN	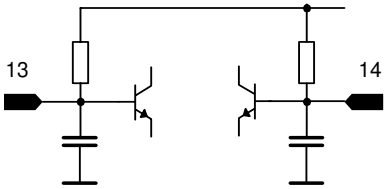	2.6 V	2.6 V	2.6 V
14 (23)	IFAMPIN		2.6 V	2.6 V	2.6 V
15 (22)	IFAMPAGC	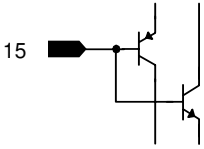	n.a.	n.a.	n.a.
16 (21)	IFAMPOUT	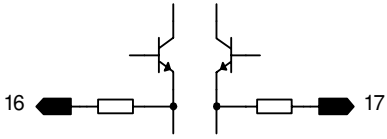	1.6 V	1.6 V	1.6 V
17 (20)	IFAMPOUT		1.6 V	1.6 V	1.6 V

Pin No.[1)]	Symbol	Equivalent I/O Schematic	Average DC voltage at V_{CC} = 3.3V		
			LOW	MID	HIGH
18 (19)	X_TAL_BUF	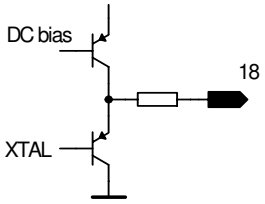	2.4 V	2.4 V	2.4 V
19 (18)	AS	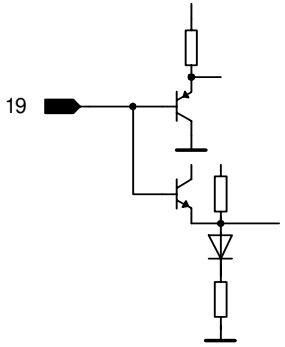	n.a.	n.a.	n.a.
20 (17)	SCL	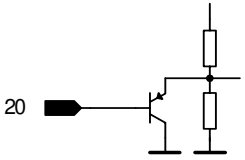	n.a.	n.a.	n.a.

Pin No.[1)]	Symbol	Equivalent I/O Schematic	Average DC voltage at V_{CC} = 3.3V		
			LOW	MID	HIGH
21 (16)	SDA	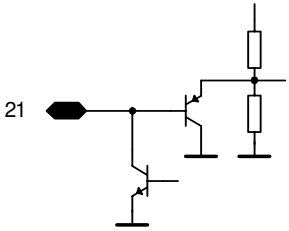	n.a	n.a	n.a
22 (15)	GNDACK	Acknowledge ground	0	0	0
23 (14)	GNDD	Digital ground	0	0	0
24 (13)	X_TAL_CAP	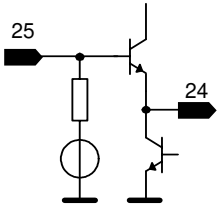	0.6 V	0.6 V	0.6 V
25 (12)	X_TAL_IN		1.2 V	1.2 V	1.2 V
26 (11)	P3	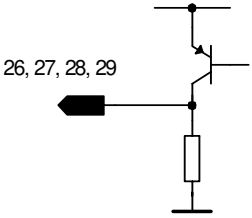	0 V or V_{CC} - V_{CE}	0 V or V_{CC} - V_{CE}	0 V or V_{CC} - V_{CE}
27 (10)	P2		0 V or V_{CC} - V_{CE}	0 V or V_{CC} - V_{CE}	0 V or V_{CC} - V_{CE}
28 (9)	P1		0 V or V_{CC} - V_{CE}	0 V or V_{CC} - V_{CE}	0 V or V_{CC} - V_{CE}
29 (8)	P0		0 V or V_{CC} - V_{CE}	0 V or V_{CC} - V_{CE}	0 V or V_{CC} - V_{CE}

Pin No.[1)]	Symbol	Equivalent I/O Schematic	Average DC voltage at V_{CC} = 3.3V		
			LOW	MID	HIGH
30 (7)	RFAGC	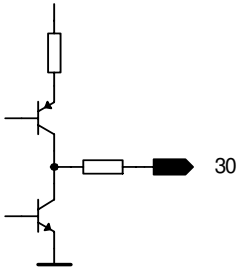	V_{RFAGC}	V_{RFAGC}	V_{RFAGC}
31 (6)	VCC	supply voltage	V_{CC}	V_{CC}	V_{CC}
33 (4)	SAWIN	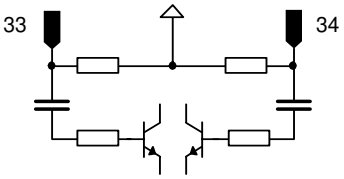	V_{CC}	V_{CC}	V_{CC}
34 (3)	SAWIN		V_{CC}	V_{CC}	V_{CC}
32 (5)	MIXOUT	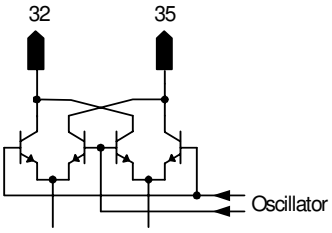	V_{CC}	V_{CC}	V_{CC}
35 (2)	MIXOUT		V_{CC}	V_{CC}	V_{CC}
36 (1)	GNDRF	RF ground	0.0 V	0.0 V	0.0 V

Pin No.[1)]	Symbol	Equivalent I/O Schematic	Average DC voltage at V_{CC} = 3.3V		
			LOW	MID	HIGH
37 (48)	LOWIN	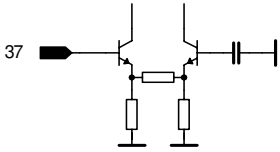	2 V		
38 (47)	MIDIN	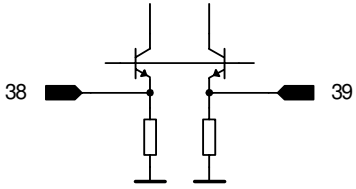		1 V	
39 (46)	MIDIN			1 V	
40 (45)	HIGHIN	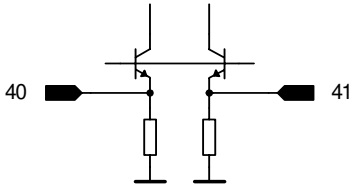			1 V
41 (44)	HIGHIN				1 V
42 (43)	RFAGC_BUF	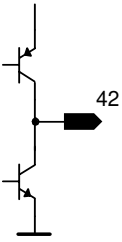	V_{RFAGC}	V_{RFAGC}	V_{RFAGC}

Pin No.[1)]	Symbol	Equivalent I/O Schematic	Average DC voltage at V_{CC} = 3.3V		
			LOW	MID	HIGH
43 (42)	OSCLOWOUT	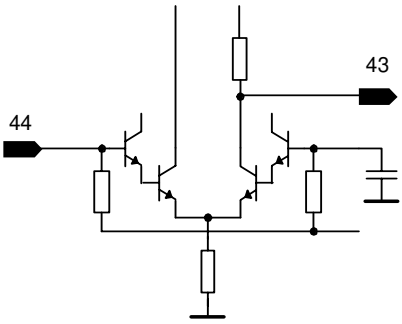	1.8 V		
44 (41)	OSCLOWIN		2.3 V		
45 (40)	GNDOSC	Oscillator ground	0.0 V	0.0 V	0.0 V
46 (39)	OSCMIDIN	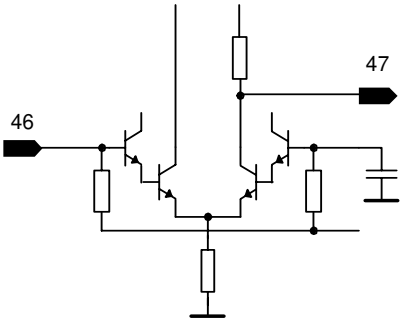		2.3 V	
47 (38)	OSCMIDOUT			1.8 V	
48 (37)	n.c.				
49 (49)	GND package	Exposed pad ground	0.0 V	0.0 V	0.0 V

1) Pin numbering for TUA 6039-2 and TUA 6039 (Pin numbering for TUA 6037 in parentheses).

2) ADC function is only available in TUA 6039-2.

3.3 Functional Block Diagram

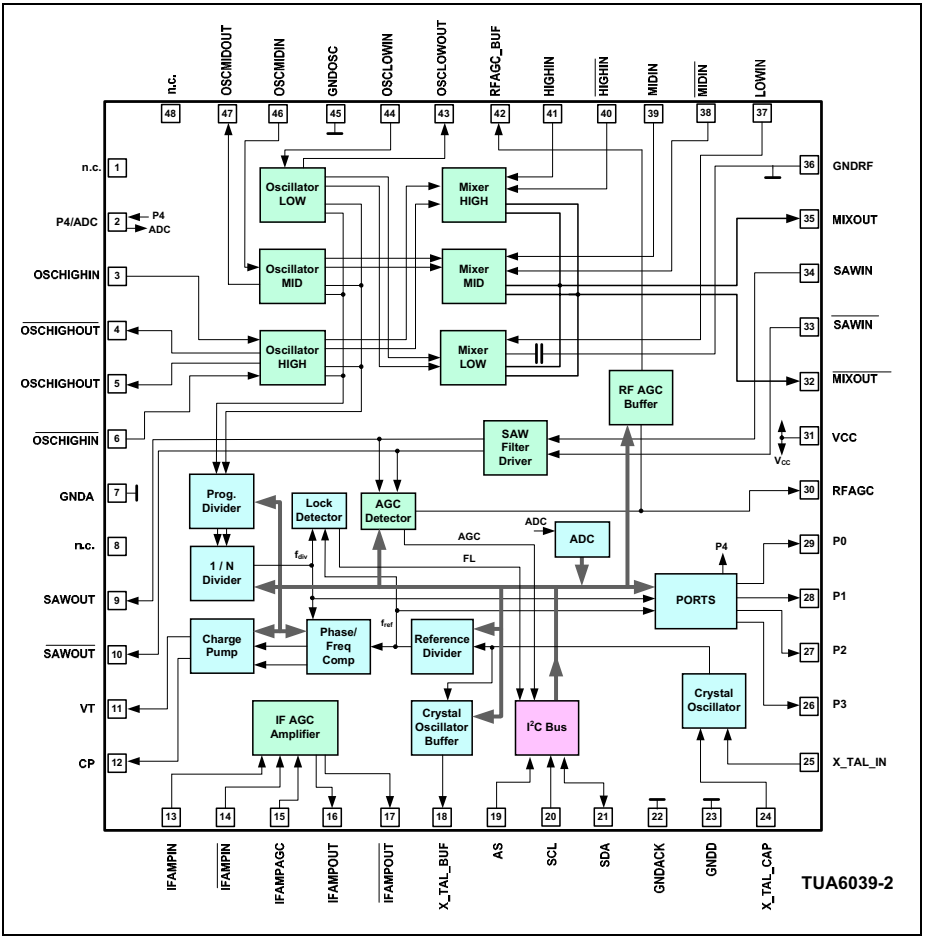

Figure 4 Functional Block Diagram of TUA 6039-2

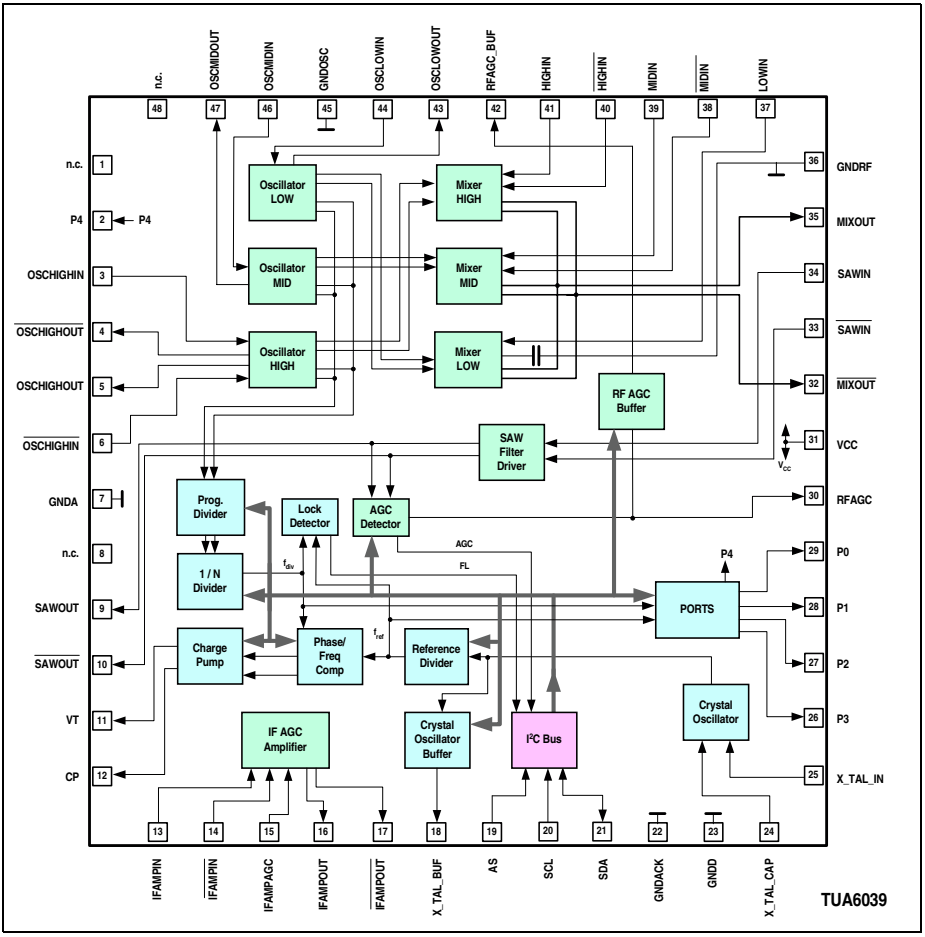

Figure 5 Functional Block Diagram of TUA 6039

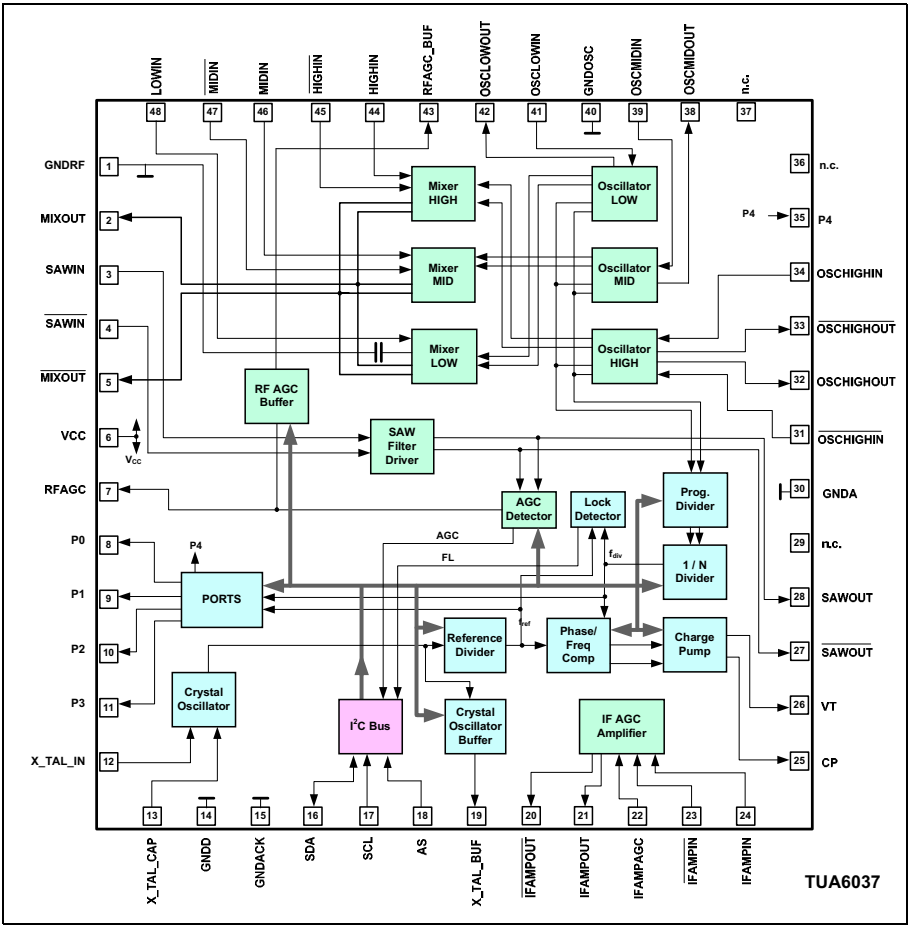

Figure 6 Functional Block Diagram of TUA 6037