Chipsmall Limited consists of a professional team with an average of over 10 year of expertise in the distribution of electronic components. Based in Hongkong, we have already established firm and mutual-benefit business relationships with customers from,Europe,America and south Asia,supplying obsolete and hard-to-find components to meet their specific needs.

With the principle of “Quality Parts,Customers Priority,Honest Operation,and Considerate Service”,our business mainly focus on the distribution of electronic components. Line cards we deal with include Microchip,ALPS,ROHM,Xilinx,Pulse,ON,Everlight and Freescale. Main products comprise IC,Modules,Potentiometer,IC Socket,Relay,Connector.Our parts cover such applications as commercial,industrial, and automotives areas.

We are looking forward to setting up business relationship with you and hope to provide you with the best service and solution. Let us make a better world for our industry!

Contact us

Tel: +86-755-8981 8866 Fax: +86-755-8427 6832
Email & Skype: info@chipsmall.com Web: www.chipsmall.com
Address: A1208, Overseas Decoration Building, #122 Zhenhua RD., Futian, Shenzhen, China

DATA SHEET

NEC

BIPOLAR DIGITAL INTEGRATED CIRCUITS

μPB1506GV, μPB1507GV

3GHz INPUT DIVIDE BY 256, 128, 64 PRESCALER IC FOR ANALOG DBS TUNERS

The μPB1506GV and μPB1507GV are 3.0 GHz input, high division silicon prescaler ICs for analog DBS tuner applications. These ICs divide-by-256, 128 and 64 contribute to produce analog DBS tuners with kit-use of 17 K series DTS controller or standard CMOS PLL synthesizer IC. The μPB1506GV/μPB1507GV are shrink package versions of the μPB586G/588G or μPB1505GR so that these smaller packages contribute to reduce the mounting space replacing from conventional ICs.

The μPB1506GV and μPB1507GV are manufactured using NEC's high f_T NESAT™IV silicon bipolar process. This process uses silicon nitride passivation film and gold electrodes. These materials can protect chip surface from external pollution and prevent corrosion/migration. Thus, these ICs have excellent performance, uniformity and reliability.

FEATURES

- High toggle frequency : f_{in} = 0.5 GHz to 3.0 GHz
- High-density surface mounting : 8-pin plastic SSOP (175 mil)
- Low current consumption : 5 V, 19 mA
- Selectable high division : ÷256, ÷128, ÷64
- Pin connection variation : μPB1506GV and μPB1507GV

APPLICATION

These ICs can use as a prescaler between local oscillator and PLL frequency synthesizer included modulus prescaler. For example, following application can be chosen;

- Analog DBS tuner's synthesizer
- Analog CATV converter synthesizer

ORDERING INFORMATION

PART NUMBER	PACKAGE	MARKING	SUPPLYING FORM
μPB1506GV-E1	8-pin plastic SSOP (175 mil)	1506	Embossed tape 8 mm wide. Pin 1 is in tape pull-out direction. 1 000 p/reel.
μPB1507GV-E1		1507	

Remarks To order evaluation samples, please contact your local NEC sales office.
(Part number for sample order: μPB1506GV, μPB1507GV)

Caution: Electro-static sensitive devices

Document No. P10767EJ3V0DS00 (3rd edition)
Date Published January 1998 N CP(K)
Printed in Japan

© NEC Corporation 1996

PIN CONNECTION (Top View)

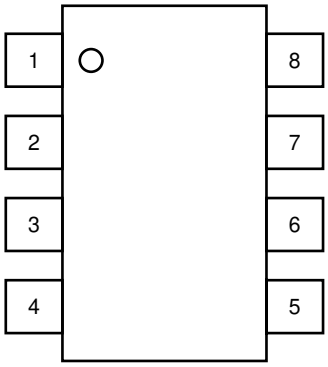

Pin NO.	μPB1506GV	μPB1507GV
1	SW1	IN
2	IN	V_{CC}
3	$\overline{IN}$	SW1
4	GND	OUT
5	NC	GND
6	SW2	SW2
7	OUT	NC
8	V_{CC}	$\overline{IN}$

PRODUCT LINE-UP

Features (division, Freq.)	Part No.	I_{CC} (mA)	f_{in} (GHz)	V_{CC} (V)	Package	Pin connection
÷512, ÷256, 2.5 GHz	μPB586G	28	0.5 to 2.5	4.5 to 5.5	8 pin SOP 225 mil	NEC original
÷128, ÷64, 2.5 GHz	μPB588G	26	0.5 to 2.5	4.5 to 5.5		
÷256, ÷128, ÷64 3.0 GHz	μPB1505GR	14	0.5 to 3.0	4.5 to 5.5		Standard
	μPB1506GV	19	0.5 to 3.0	4.5 to 5.5	8 pin SSOP 175 mil	NEC original
	μPB1507GV	19	0.5 to 3.0	4.5 to 5.5		Standard

Remarks
- This table shows the TYP values of main parameters. Please refer to ELECTRICAL CHARACTERISTICS.
- μPB586G and μPB588G are discontinued.

INTERNAL BLOCK DIAGRAM

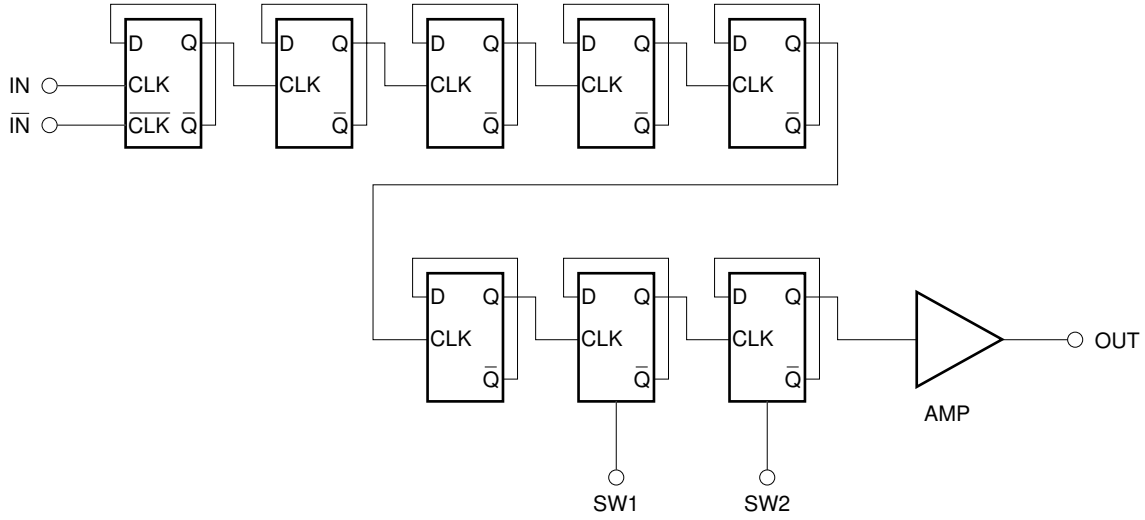

SYSTEM APPLICATION EXAMPLE

RF unit block of Analog DBS tuners

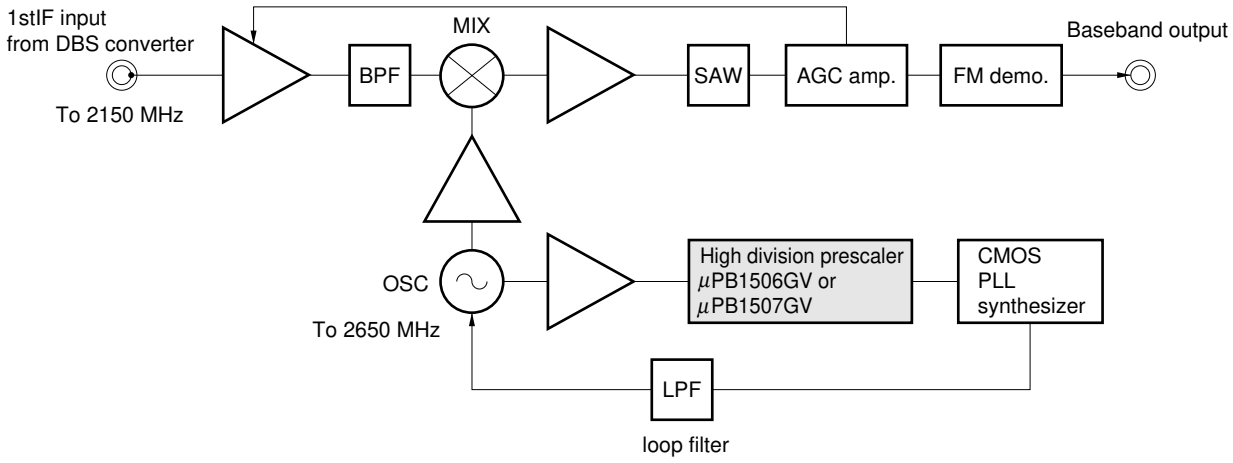

RF unit block of Analog CATV converter

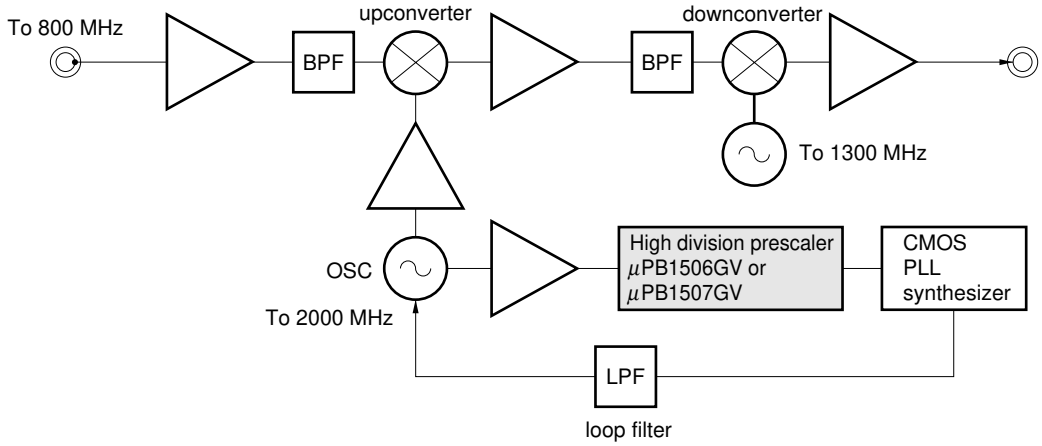

PIN EXPLANATION

<table>
<tr><th rowspan="2">Pin name</th><th rowspan="2">Applied voltage V</th><th rowspan="2">Pin voltage V</th><th rowspan="2">Functions and explanation</th><th colspan="2">Pin no.</th></tr>
<tr><th>μPB1506GV</th><th>μPB1507GV</th></tr>
<tr><td>IN</td><td>—</td><td>2.9</td><td>Signal input pin. This pin should be coupled to signal source with capacitor (e.g. 1 000 pF) for DC cut.</td><td>2</td><td>1</td></tr>
<tr><td>$\overline{IN}$</td><td>—</td><td>2.9</td><td>Signal input bypass pin. This pin must be equipped with bypass capacitor (e.g. 1 000 pF) to minimize ground impedance.</td><td>3</td><td>8</td></tr>
<tr><td>GND</td><td>0</td><td>—</td><td>Ground pin. Ground pattern on the board should be formed as wide as possible to minimize ground impedance.</td><td>4</td><td>5</td></tr>
<tr><td>SW1</td><td rowspan="2">H/L</td><td rowspan="2">—</td><td rowspan="2">Divide ratio input pin. The ratio can be determined by following applied level to these pins.
<table>
<tr><th colspan="2" rowspan="2"></th><th colspan="2">SW2</th></tr>
<tr><th>H</th><th>L</th></tr>
<tr><td rowspan="2">SW1</td><td>H</td><td>÷64</td><td>÷128</td></tr>
<tr><td>L</td><td>÷128</td><td>÷256</td></tr>
</table>
These pins should be equipped with bypass capacitor (e.g. 1 000 pF) to minimize ground impedance.</td><td>1</td><td>3</td></tr>
<tr><td>SW2</td><td>6</td><td>6</td></tr>
<tr><td>V_{CC}</td><td>4.5 to 5.5</td><td>—</td><td>Power supply pin. This pin must be equipped with bypass capacitor (e.g. 10 000 pF) to minimize ground impedance.</td><td>8</td><td>2</td></tr>
<tr><td>OUT</td><td>—</td><td>2.6 to 4.7</td><td>Divided frequency output pin. This pin is designed as emitter follower output. This pin can be connected to CMOS input due to 1.2 V_{P-P} MIN output.</td><td>7</td><td>4</td></tr>
<tr><td>NC</td><td>—</td><td>—</td><td>Non connection pin. This pin must be openned.</td><td>5</td><td>7</td></tr>
</table>

ABSOLUTE MAXIMUM RATINGS

PARAMETER	SYMBOL	CONDITION	RATINGS	UNIT
Supply voltage	V_{CC}	T_A = +25 °C	−0.5 to +6.0	V
Input voltage	V_{in}	T_A = +25 °C	−0.5 to V_{CC} + 0.5	V
Total power dissipation	P_D	Mounted on double sided copper clad 50 × 50 × 1.6 mm epoxy glass PWB (T_A = +85 °C)	250	mW
Operating ambient temperature	T_A		−40 to +85	°C
Storage temperature	T_{stg}		−55 to +150	°C

RECOMMENDED OPERATING CONDITIONS

PARAMETER	SYMBOL	MIN.	TYP.	MAX.	UNIT	NOTICE
Supply voltage	V_{CC}	4.5	5.0	5.5	V	
Operating ambient temperature	T_A	−40	+25	+85	°C	

ELECTRICAL CHARACTERISTICS (T_A = −40 to +85 °C, V_{CC} = 4.5 to 5.5 V, Z_S = 50 Ω)

PARAMETER	SYMBOL	TEST CONDITION	MIN.	TYP.	MAX.	UNIT
Circuit current	I_{CC}	No signals	12.5	19	26.5	mA
Upper limit operating frequency	$f_{in(u)}$	P_{in} = −15 to +6 dBm	3.0	—	—	GHz
Lower limit operating frequency 1	$f_{in(L)1}$	P_{in} = −10 to +6 dBm	—	—	0.5	GHz
Lower limit operating frequency 2	$f_{in(L)2}$	P_{in} = −15 to +6 dBm	—	—	1.0	GHz
Input power 1	P_{in1}	f_{in} = 1.0 to 3.0 GHz	−15	—	+6	dBm
Input power 2	P_{in2}	f_{in} = 0.5 to 1.0 GHz	−10	—	+6	dBm
Output Voltage	V_{out}	C_L = 8 pF	1.2	1.6	—	V_{P-P}
Divide ratio control input high	V_{IH1}	Connection in the test circuit	V_{CC}	V_{CC}	V_{CC}	
Divide ratio control input low	V_{IL1}	Connection in the test circuit	OPEN or GND	OPEN or GND	OPEN or GND	
Divide ratio control input high	V_{IH2}	Connection in the test circuit	V_{CC}	V_{CC}	V_{CC}	
Divide ratio control input low	V_{IL2}	Connection in the test circuit	OPEN or GND	OPEN or GND	OPEN or GND	

TYPICAL CHARACTERISTICS (Unless otherwise specified T_A = +25 °C)

CIRCUIT CURRENT vs. SUPPLY VOLTAGE

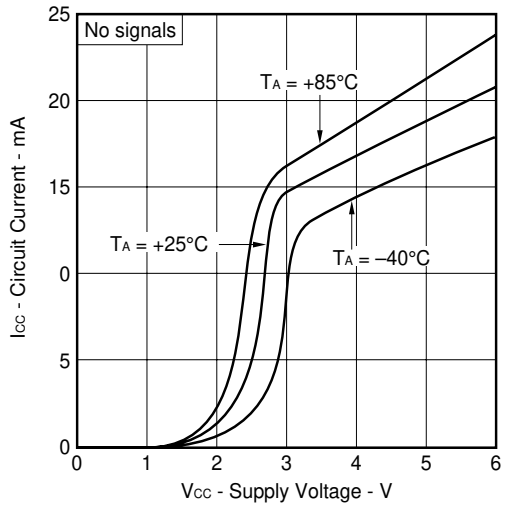

Divide by 64 mode

INPUT POWER vs. INPUT FREQUENCY

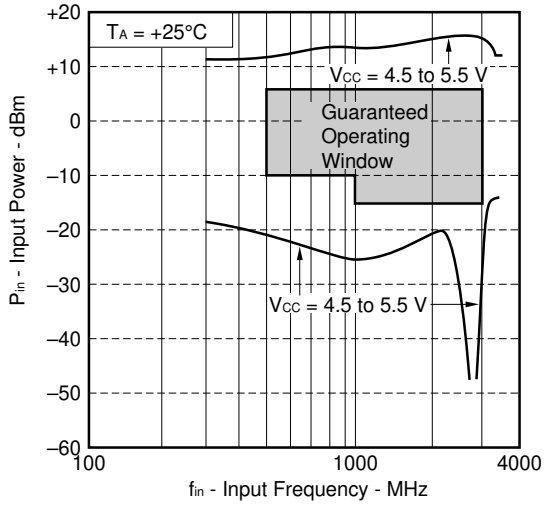

INPUT POWER vs. INPUT FREQUENCY

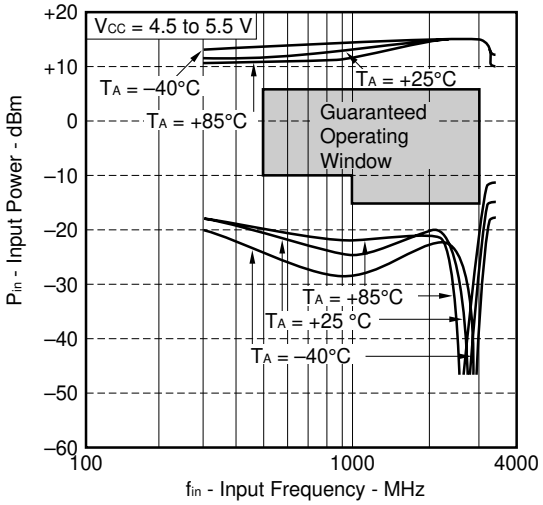

OUTPUT VOLTAGE vs.INPUT FREQUENCY

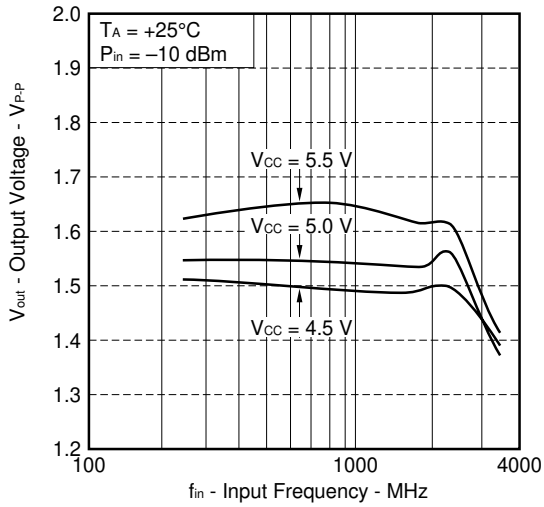

OUTPUT VOLTAGE vs.INPUT FREQUENCY

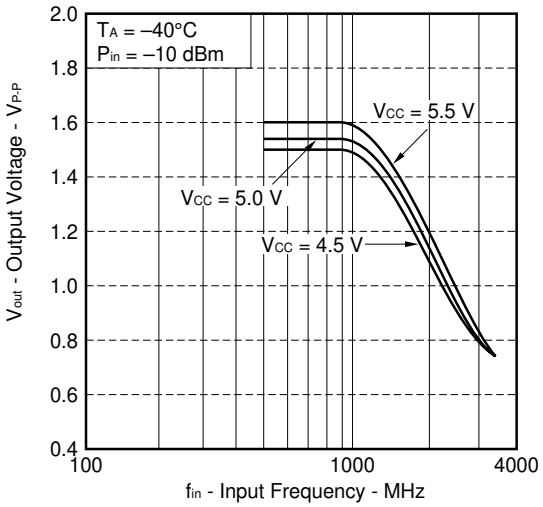

OUTPUT VOLTAGE vs. INPUT RFEQUENCY

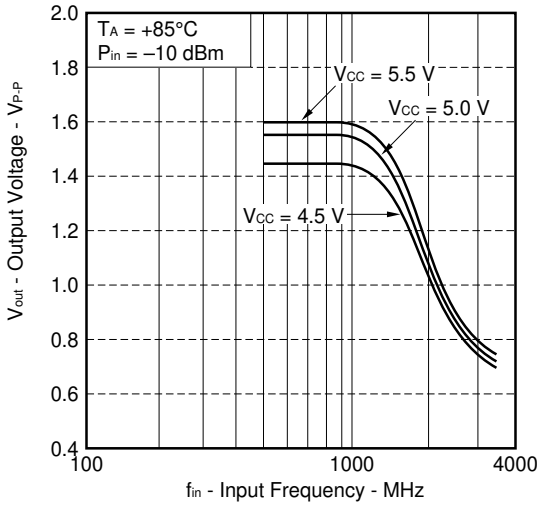

Divide by 128 mode

INPUT POWER vs. INPUT FREQUENCY

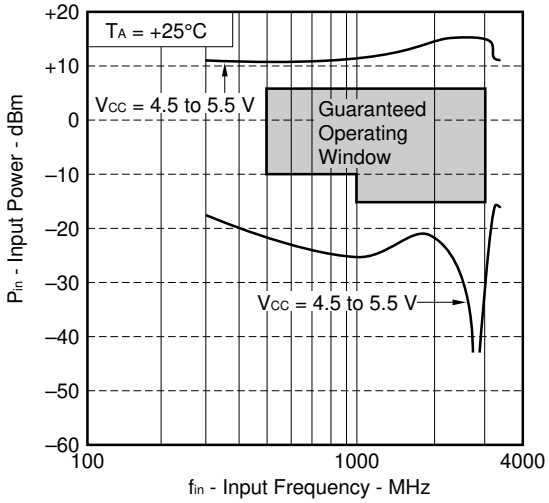

INPUT POWER vs. INPUT FREQUENCY

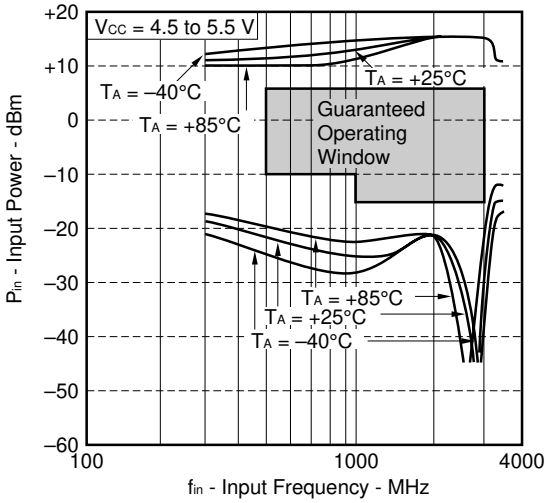

OUTPUT VOLTAGE vs. INPUT FREQUENCY

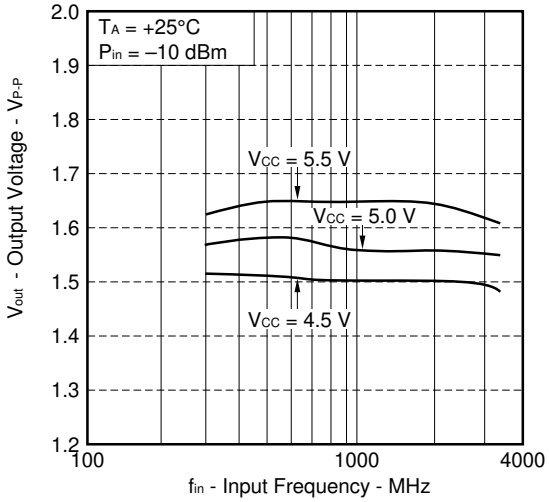

OUTPUT VOLTAGE vs. INPUT FREQUENCY

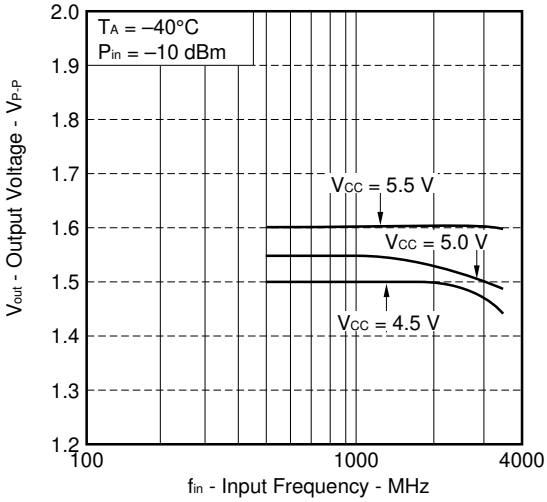

OUTPUT VOLTAGE vs. INPUT FREQUENCY

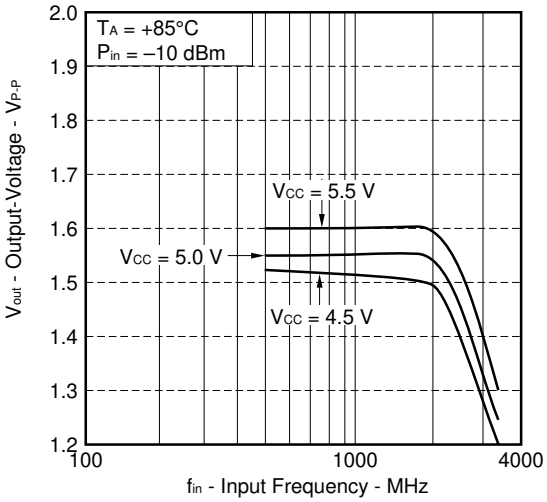

Divide by 256 mode

INPUT POWER vs. INPUT FREQUENCY

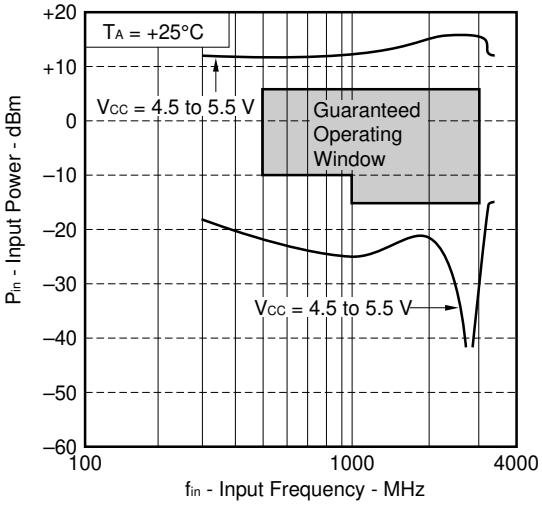

INPUT POWER vs. INPUT FREQUENCY

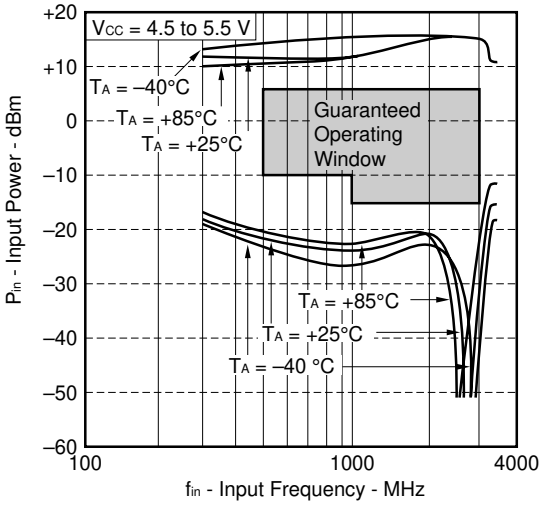

OUTPUT VOLTAGE vs. INPUT FREQUENCY

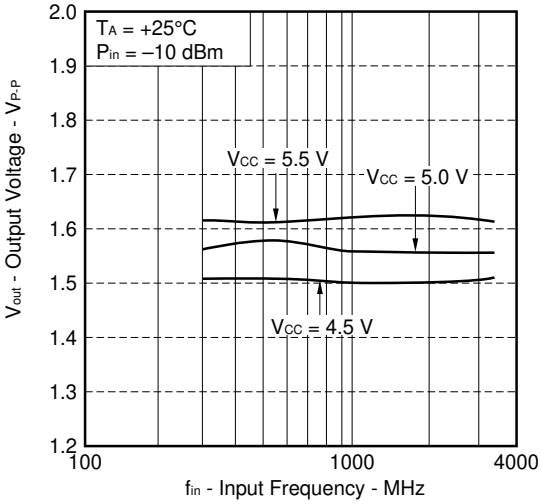

OUTPUT VOLTAGE vs. INPUT FREQUENCY

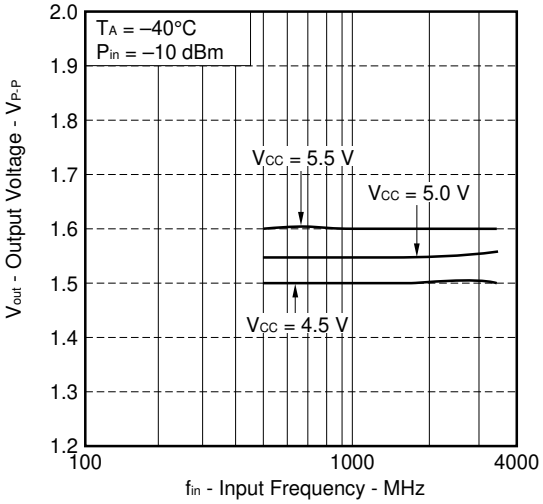

OUTPUT VOLTAGE vs. INPUT FREQUENCY

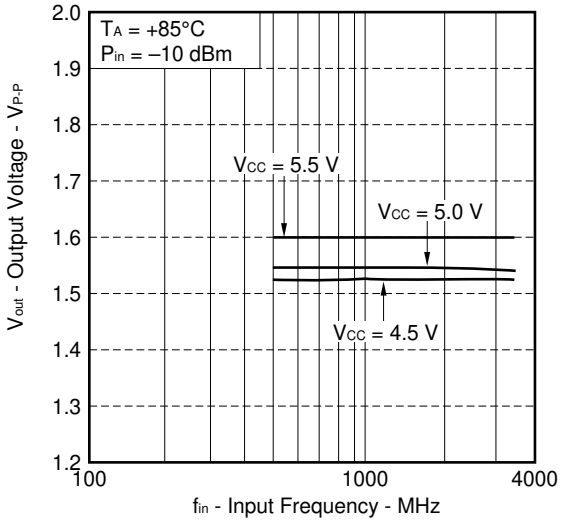

μPB1506GV

S11 vs. INPUT FREQUENCY

VCC = 5.0 V

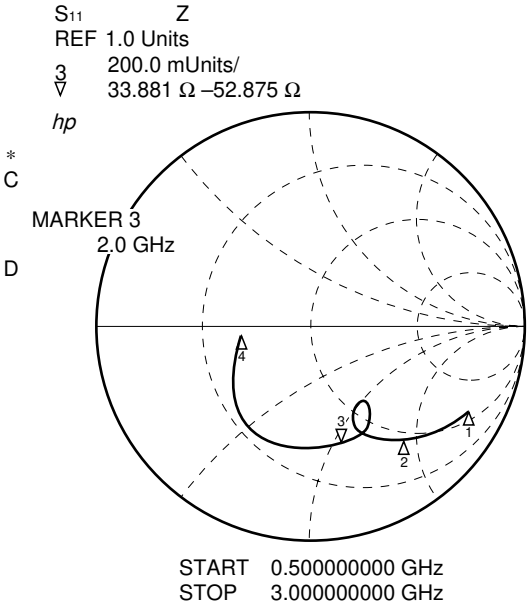

Δ1: 500 MHz
Δ2: 1000 MHz
Δ3: 2000 MHz
Δ4: 3000 MHz

FREQUENCY MHz	S11 MAG	S11 ANG
500.0000	.868	–26.6
600.0000	.828	–32.6
700.0000	.794	–37.4
800.0000	.761	–41.9
900.0000	.721	–46.5
1000.0000	.706	–49.3
1100.0000	.662	–54.0
1200.0000	.629	–57.2
1300.0000	.595	–60.2
1400.0000	.554	–62.9
1500.0000	.516	–64.8
1600.0000	.440	–61.9
1700.0000	.428	–51.0
1800.0000	.543	–61.5
1900.0000	.555	–68.4
2000.0000	.560	–74.7
2100.0000	.558	–79.5
2200.0000	.564	–84.9
2300.0000	.570	–90.9
2400.0000	.574	–98.3
2500.0000	.574	–107.9
2600.0000	.564	–118.3
2700.0000	.530	–131.4
2800.0000	.476	–144.6
2900.0000	.411	–159.1
3000.0000	.331	–175.8

μPB1506GV

S_{22} vs. OUTPUT FREQUENCY

Divide by 64 mode, V_{CC} = 5.0 V

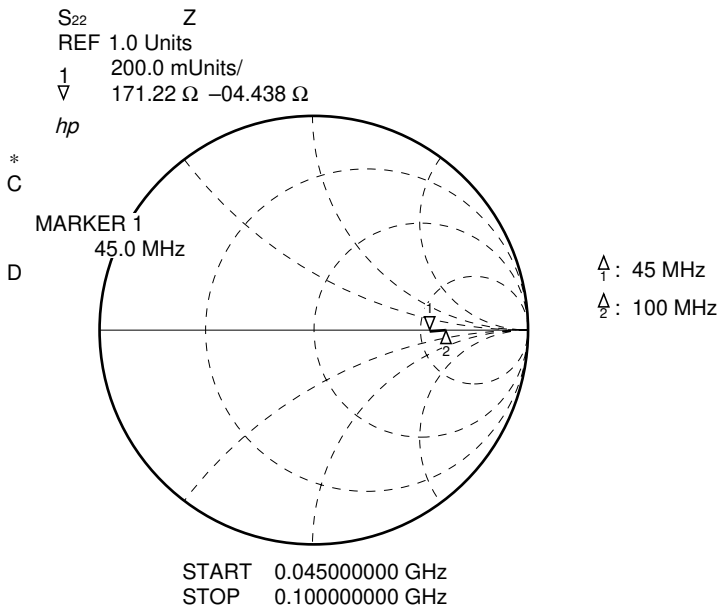

FREQUENCY MHz	S_{22} MAG	ANG
45.000	.542	–1.4
50.000	.602	–.3
55.000	.616	0.0
60.000	.605	1.1
65.000	.609	.7
70.000	.616	.3
75.000	.620	.1
80.000	.622	0.0
85.000	.619	.6
90.000	.610	.9
95.000	.626	–.7
100.000	.623	–1.7

μPB1506GV

S_{22} vs. OUTPUT FREQUENCY

Divide by 128 mode, V_{CC} = 5.0 V

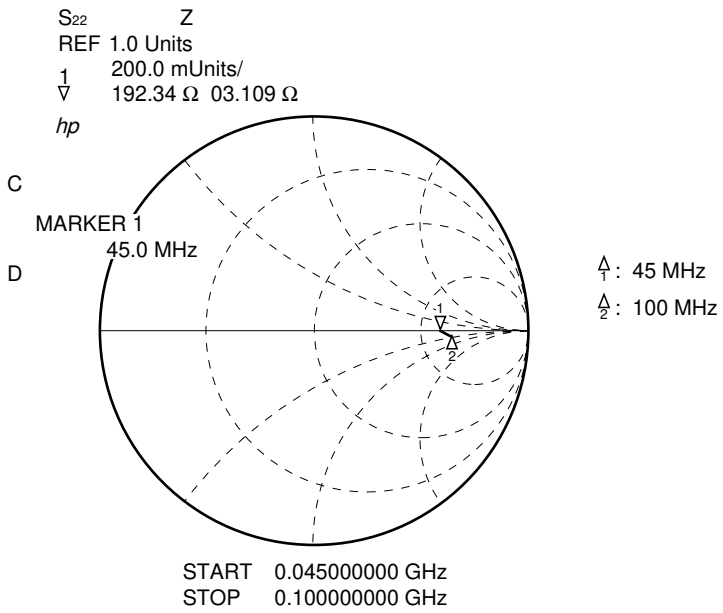

FREQUENCY MHz	S_{22} MAG	ANG
45.000	.590	.4
50.000	.604	–1.0
55.000	.610	–1.1
60.000	.607	–.8
65.000	.548	–5.9
70.000	.630	–0.0
75.000	.615	–1.0
80.000	.618	–1.4
85.000	.617	–1.2
90.000	.616	–2.2
95.000	.623	–2.4
100.000	.624	–2.3

μPB1506GV

S_{22} vs. OUTPUT FREQUENCY

Divide by 256 mode, V_{CC} = 5.0 V

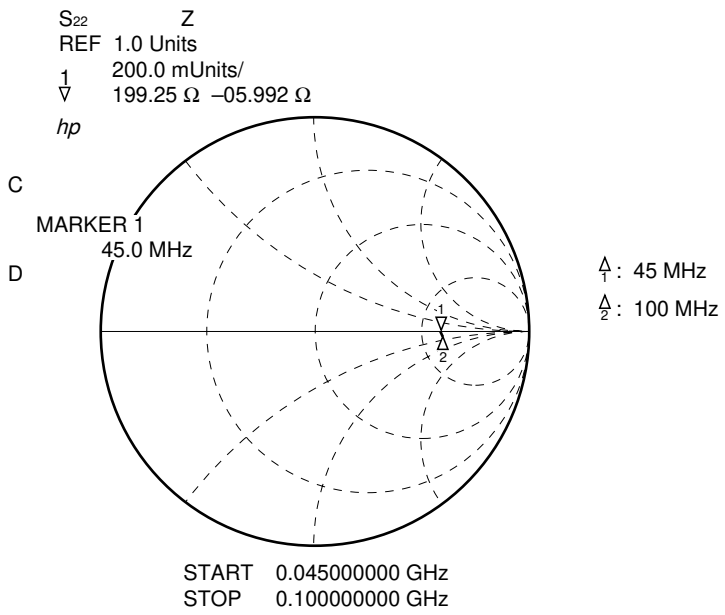

FREQUENCY MHz	S_{22} MAG	ANG
45.000	.601	–.9
50.000	.609	–1.6
55.000	.611	–1.5
60.000	.620	–1.4
65.000	.607	–2.1
70.000	.615	–1.9
75.000	.613	–3.2
80.000	.611	–2.8
85.000	.607	–2.5
90.000	.605	–2.4
95.000	.610	–3.0
100.000	.608	–2.8

μPB1507GV

S_{11} vs. INPUT FREQUENCY

V_{CC} = 5.0 V

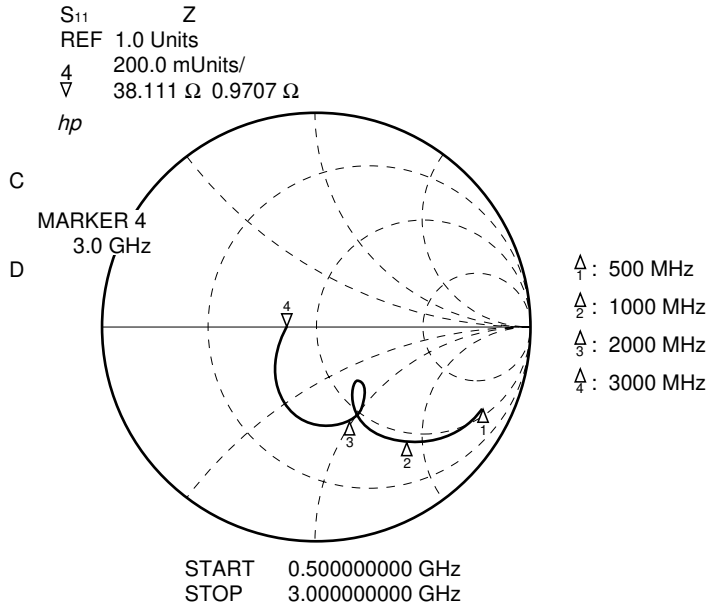

FREQUENCY MHz	S_{11} MAG	ANG
500.0000	.857	–27.5
600.0000	.849	–32.0
700.0000	.800	–38.9
800.0000	.764	–43.8
900.0000	.725	–49.0
1000.0000	.665	–50.9
1100.0000	.619	–55.3
1200.0000	.573	–59.3
1300.0000	.531	–61.3
1400.0000	.484	–62.8
1500.0000	.439	–63.0
1600.0000	.377	–59.1
1700.0000	.340	–54.1
1800.0000	.377	–54.7
1900.0000	.441	–59.5
2000.0000	.464	–67.2
2100.0000	.443	–67.4
2200.0000	.466	–74.5
2300.0000	.465	–81.3
2400.0000	.454	–89.4
2500.0000	.433	–99.2
2600.0000	.383	–109.6
2700.0000	.350	–114.0
2800.0000	.332	–124.2
2900.0000	.271	–141.2
3000.0000	.185	–163.6

μPB1507GV

S_{22} vs. OUTPUT FREQUENCY

Divide by 64 mode, V_{CC} = 5.0 V

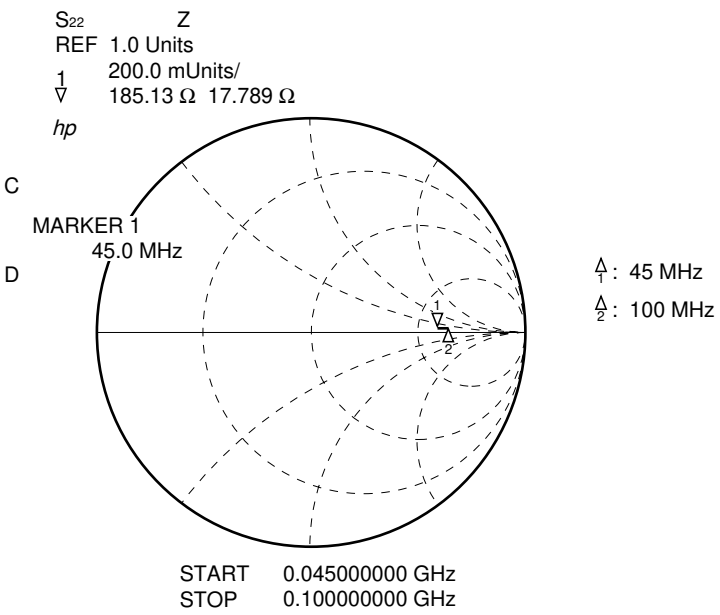

FREQUENCY MHz	S_{22} MAG	ANG
45.000	.580	3.4
50.000	.572	2.5
55.000	.574	3.0
60.000	.574	2.7
65.000	.584	3.0
70.000	.587	2.6
75.000	.592	2.4
80.000	.587	2.6
85.000	.589	2.9
90.000	.591	2.9
95.000	.573	1.7
100.000	.604	2.9

μPB1507GV

S_{22} vs. OUTPUT FREQUENCY

Divide by 128 mode, V_{CC} = 5.0 V

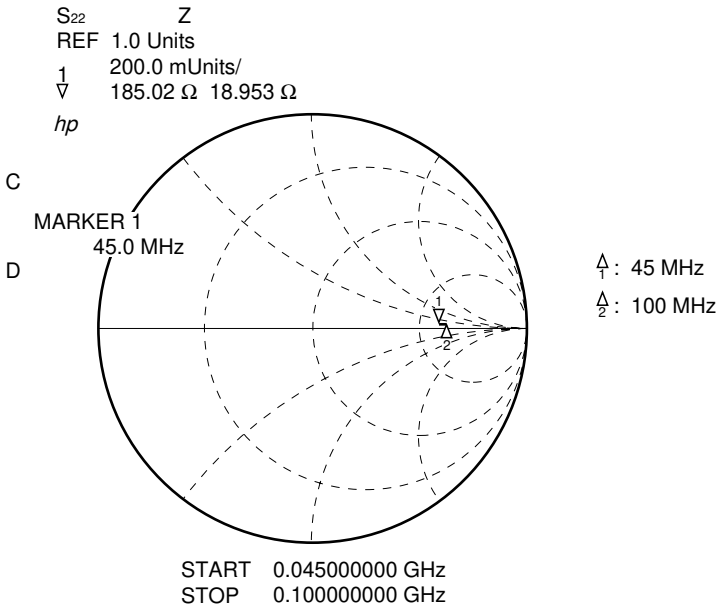

FREQUENCY MHz	S_{22} MAG	ANG
45.000	.578	3.2
50.000	.571	2.8
55.000	.572	3.3
60.000	.576	3.0
65.000	.584	3.1
70.000	.587	2.8
75.000	.589	2.4
80.000	.589	2.8
85.000	.588	3.0
90.000	.593	2.8
95.000	.598	3.0
100.000	.602	2.9

μPB1507GV

S_{22} vs. OUTPUT FREQUENCY

Divide by 256 mode, V_{CC} = 5.0 V

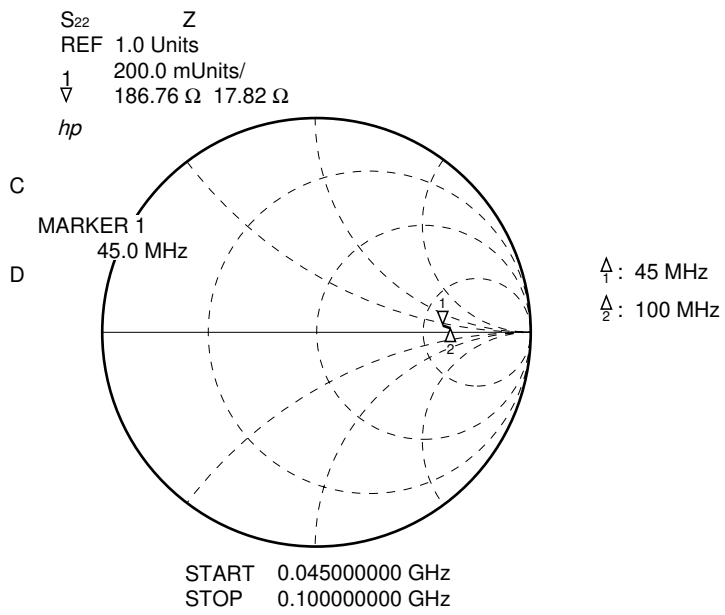

FREQUENCY MHz	S_{22} MAG	ANG
45.000	.580	3.0
50.000	.572	2.8
55.000	.571	2.9
60.000	.576	2.9
65.000	.585	3.2
70.000	.590	2.8
75.000	.589	2.5
80.000	.590	2.6
85.000	.588	2.9
90.000	.597	2.9
95.000	.600	3.1
100.000	.601	3.1

TEST CIRCUIT

μPB1506GV

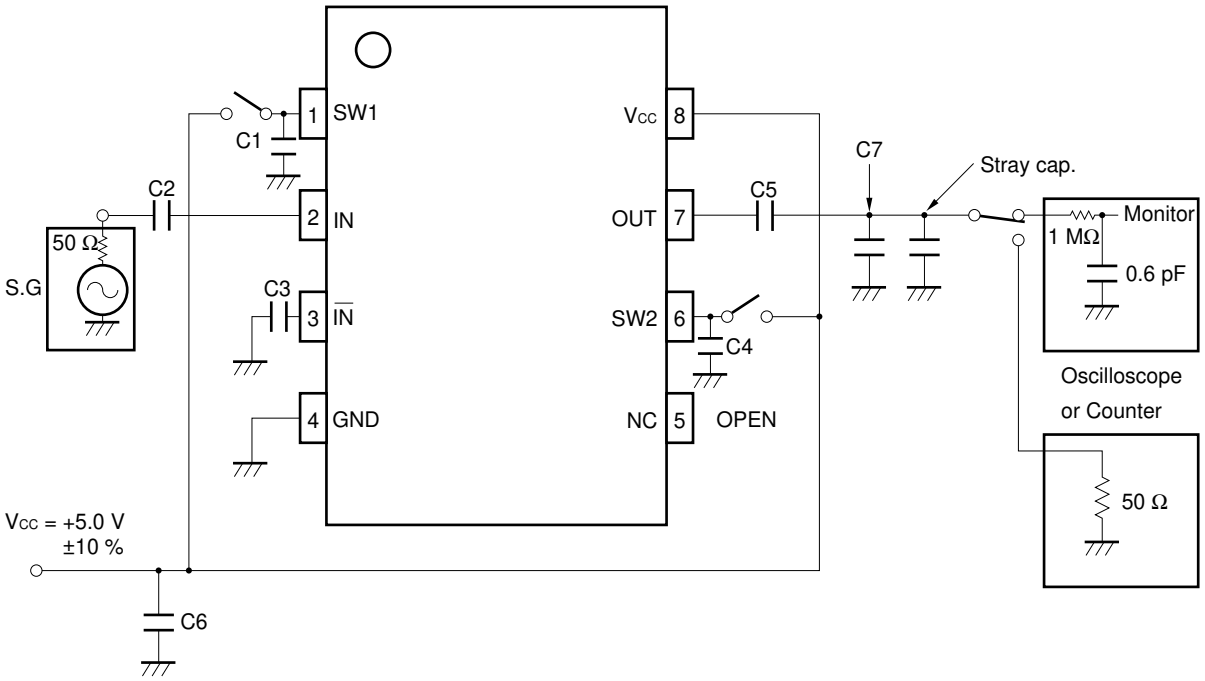

- SG (HP-8665A)
- Counter (HP5350B) : To measure input sensitivity
  or
  Oscilloscope : To measure output voltage swing

Divide ratio setting

		SW2	
		H	L
SW1	H	1/64	1/128
	L	1/128	1/256

H: Connect to V_{CC}

L: Connect to GND or OPEN

COMPONENT LIST

	μPB1506GV	μPB1507GV
C1 to C5	1 000 pF	1 000 pF
C6	10 000 pF	10 000 pF
Stray cap.	Aprox 4 pF	Aprox 5 pF
C7	3.5 pF*	2.5 pF*

* Capacitance C_L = 8 pF for DUT includes C7 value + stray capacitance on the board and measurement equipment.

TEST CIRCUIT

μPB1507GV

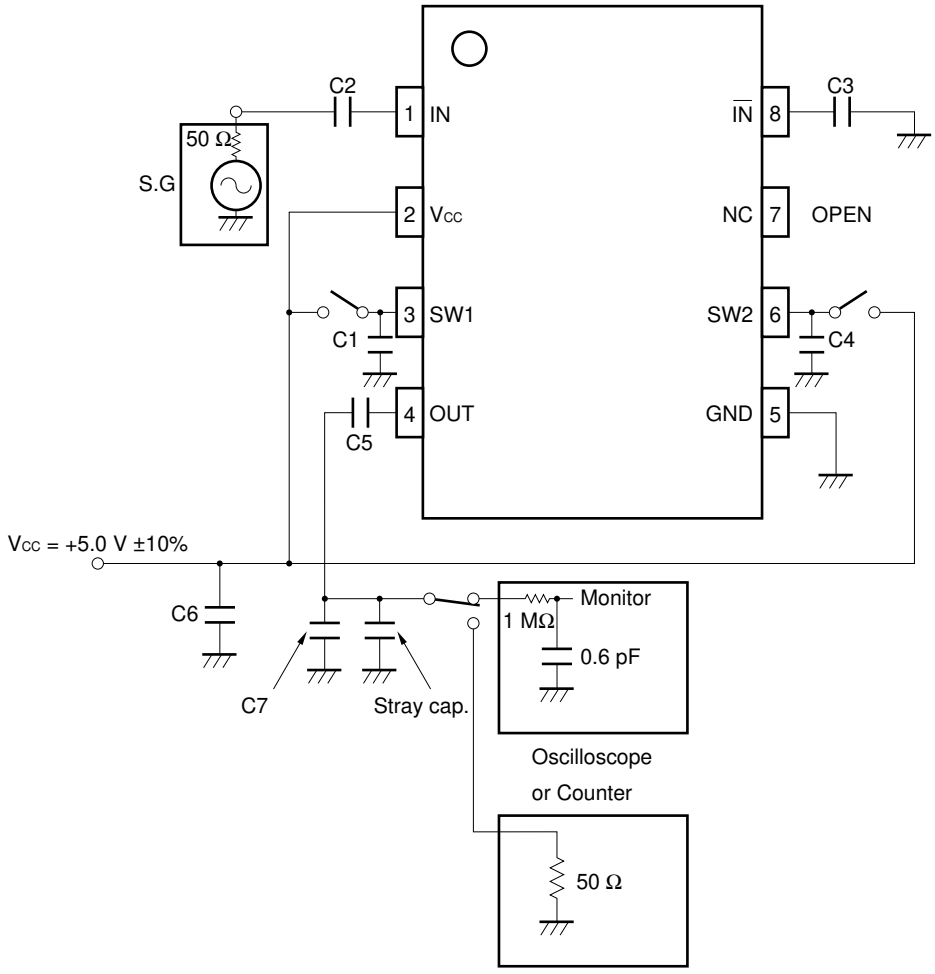

- SG (HP-8665A)
- Counter (HP5350B) : To measure input sensitivity
  or
  Oscilloscope : To measure output voltage swing

Divide ratio setting

		SW2	
		H	L
SW1	H	1/64	1/128
	L	1/128	1/256

H: Connect to V_{CC}

L: Connect to GND or OPEN

ILLUSTRATION OF THE TEST CIRCUIT ASSEMBLED ON EVALUATION BOARD

μPB1506GV

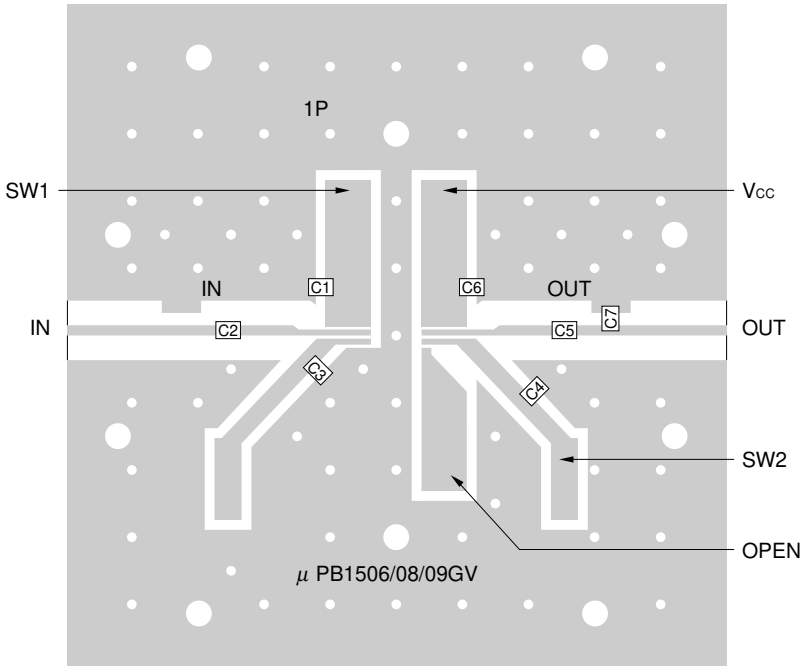

μPB1507GV

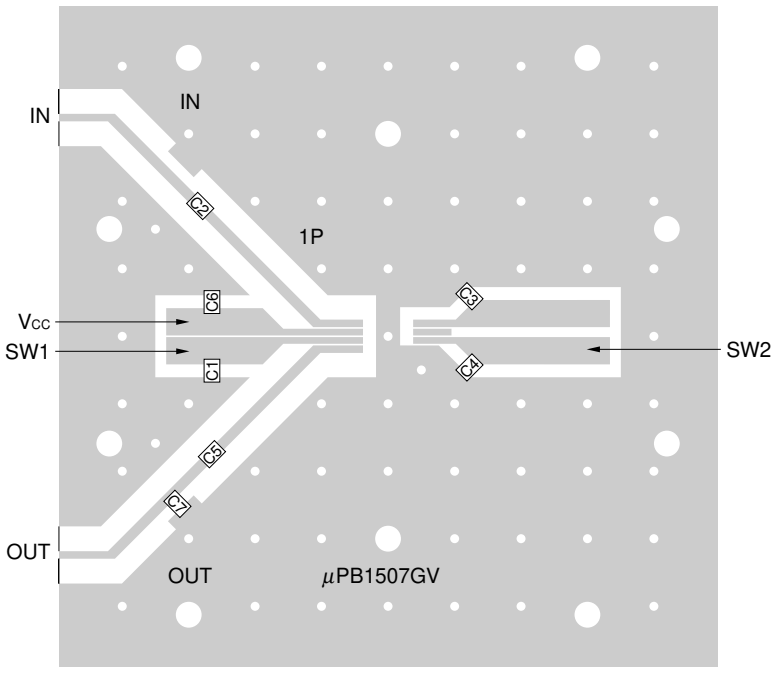

EVALUATION BOARD CHARACTERS

(1) 35 μm thick double-sided copper clad 50 × 50 × 0.4 mm polyimide board

(2) Back side: GND pattern

(3) Solder plated patterns

(4) ∘◯ : Through holes

PACKAGE DIMENSIONS

8 PIN PLASTIC SSOP (UNIT: mm) (175 mil)

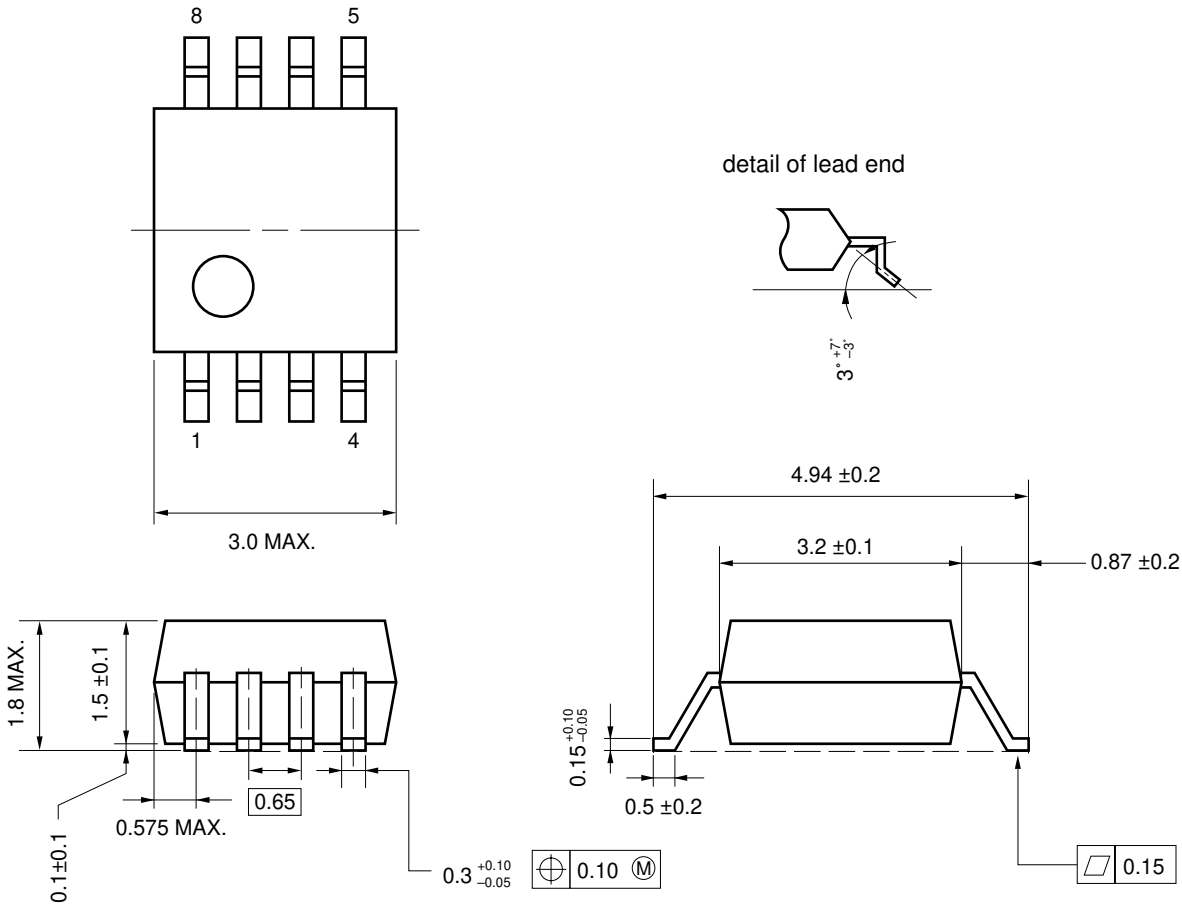

NOTE CORRECT USE

(1) Observe precautions for handling because of electro-static sensitive devices.

(2) Form a ground pattern as wide as possible to minimize ground impedance (to prevent undesired operation).

(3) Keep the wiring length of the ground pins as short as possible.

(4) Connect a bypass capacitor (e.g. 10 000 pF) to the V_{CC} pin.

RECOMMENDED SOLDERING CONDITIONS

This product should be soldered in the following recommended conditions. Other soldering methods and conditions than the recommended conditions are to be consulted with our sales representatives.

μPB1506GV, μPB1507GV

Soldering method	Soldering conditions	Recommended condition symbol
Infrared ray reflow	Package peak temperature: 235 °C, Hour: within 30 s. (more than 210 °C), Time: 3 times, Limited days: no.*	IR35-00-3
VPS	Package peak temperature: 215 °C, Hour: within 40 s. (more than 200 °C), Time: 3 times, Limited days: no.*	VP15-00-3
Wave soldering	Soldering tub temperature: less than 260 °C, Hour: within 10 s., Time: 1 time, Limited days: no.	WS60-00-1
Pin part heating	Pin area temperature: less than 300 °C, Hour: within 3 s./pin, Limited days: no.*	

* It is the storage days after opening a dry pack, the storage conditions are 25 °C, less than 65 % RH.

Caution The combined use of soldering method is to be avoided (However, except the pin area heating method).

For details of recommended soldering conditions for surface mounting, refer to information document SEMICONDUCTOR DEVICE MOUNTING TECHNOLOGY MANUAL (C10535E).

[MEMO]

ATTENTION

OBSERVE PRECAUTIONS
FOR HANDLING
ELECTROSTATIC
SENSITIVE
DEVICES

No part of this document may be copied or reproduced in any form or by any means without the prior written consent of NEC Corporation. NEC Corporation assumes no responsibility for any errors which may appear in this document.

NEC Corporation does not assume any liability for infringement of patents, copyrights or other intellectual property rights of third parties by or arising from use of a device described herein or any other liability arising from use of such device. No license, either express, implied or otherwise, is granted under any patents, copyrights or other intellectual property rights of NEC Corporation or others.

While NEC Corporation has been making continuous effort to enhance the reliability of its semiconductor devices, the possibility of defects cannot be eliminated entirely. To minimize risks of damage or injury to persons or property arising from a defect in an NEC semiconductor device, customers must incorporate sufficient safety measures in its design, such as redundancy, fire-containment, and anti-failure features.

NEC devices are classified into the following three quality grades:

"Standard", "Special", and "Specific". The Specific quality grade applies only to devices developed based on a customer designated "quality assurance program" for a specific application. The recommended applications of a device depend on its quality grade, as indicated below. Customers must check the quality grade of each device before using it in a particular application.

Standard: Computers, office equipment, communications equipment, test and measurement equipment, audio and visual equipment, home electronic appliances, machine tools, personal electronic equipment and industrial robots

Special: Transportation equipment (automobiles, trains, ships, etc.), traffic control systems, anti-disaster systems, anti-crime systems, safety equipment and medical equipment (not specifically designed for life support)

Specific: Aircrafts, aerospace equipment, submersible repeaters, nuclear reactor control systems, life support systems or medical equipment for life support, etc.

The quality grade of NEC devices is "Standard" unless otherwise specified in NEC's Data Sheets or Data Books. If customers intend to use NEC devices for applications other than those specified for Standard quality grade, they should contact an NEC sales representative in advance.

Anti-radioactive design is not implemented in this product.

M4 96.5