Chipsmall Limited consists of a professional team with an average of over 10 year of expertise in the distribution of electronic components. Based in Hongkong, we have already established firm and mutual-benefit business relationships with customers from,Europe,America and south Asia,supplying obsolete and hard-to-find components to meet their specific needs.

With the principle of “Quality Parts,Customers Priority,Honest Operation,and Considerate Service”,our business mainly focus on the distribution of electronic components. Line cards we deal with include Microchip,ALPS,ROHM,Xilinx,Pulse,ON,Everlight and Freescale. Main products comprise IC,Modules,Potentiometer,IC Socket,Relay,Connector.Our parts cover such applications as commercial,industrial, and automotives areas.

We are looking forward to setting up business relationship with you and hope to provide you with the best service and solution. Let us make a better world for our industry!

Contact us

Tel: +86-755-8981 8866 Fax: +86-755-8427 6832
Email & Skype: info@chipsmall.com Web: www.chipsmall.com
Address: A1208, Overseas Decoration Building, #122 Zhenhua RD., Futian, Shenzhen, China

DWG NO.	SH	CUSTOMER	CUSTOMER P/N	CUST. REV
1-0569	1			

DATA CONTAINED IN THIS DOCUMENT IS PROPRIETARY TO EMERSON CONNECTIVITY SOLUTIONS AND SHALL NOT BE DISCLOSED, COPIED OR USED FOR PROCUREMENT OR MANUFACTURE WITHOUT EXPRESS WRITTEN PERMISSION

REVISIONS

REV	DESCRIPTIONS	DATE	APPROVED
S	ECO 53205	5/17/11	TKo

DASH NO	CABLE ACCOMMODATED	A HEX	ASSEMBLE PER
-D1	COMM/SCOPE 7538	.178	TAI-247
-D2	BELDEN 1505A GEPCO VPM2000	.255	
-D3	RG-59		
-D4	BELDEN 1694A GEPCO VSD2001	.290	
-D5	BELDEN 7731A COMM/SCOPE 5906	.403	
-D6	BELDEN 1695A	.290	
-D7	BELDEN 9221 RG-179	.178	
-D8	BELDEN 1506A GEPCO VPM2000TK	.255	
-D9	BELDEN 9209		
-D10	BELDEN 8281	.324	
-D11	WESTPENN 25815	.255	
-D12	NOKIA 0.6/2.8	.213	
-D13	COMM/SCOPE 7530	.344	
-D14	BELDEN 8279 GEPCO VPM618 CANARE L-3CFB	.255	
-D15	COMM/SCOPE F59	.290	
-D16	BELDEN 7732A COMM/SCOPE 2285	.403	
-D17	NK NETWORKS 0.6/3.7	.290	
-D18	COMM/SCOPE S59 HEC		
-D19	BELDEN 1855A	.213	
-D20	BELDEN 1505F	.255	
-D21	VDM230	.213	
-D23	M17/2 (RG 6)	.344	
-D24	BELDEN 179DT	.178	
-D25	BELDEN 1694F	.324	

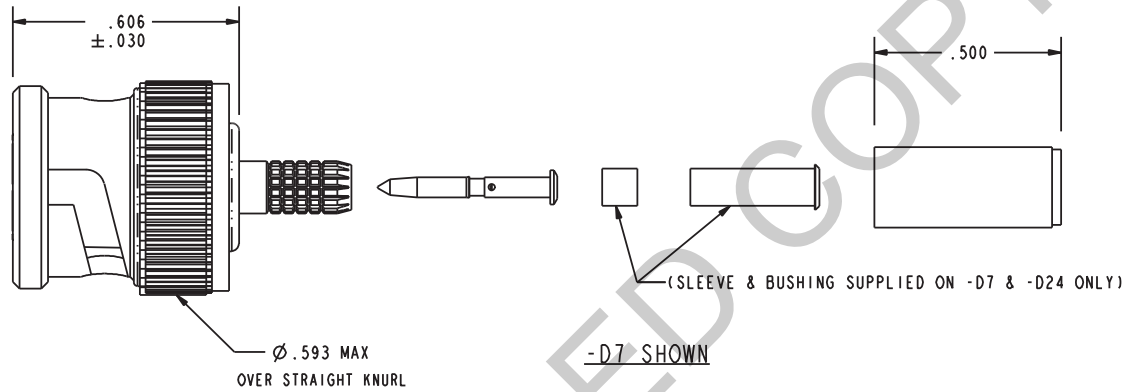

-D7 SHOWN

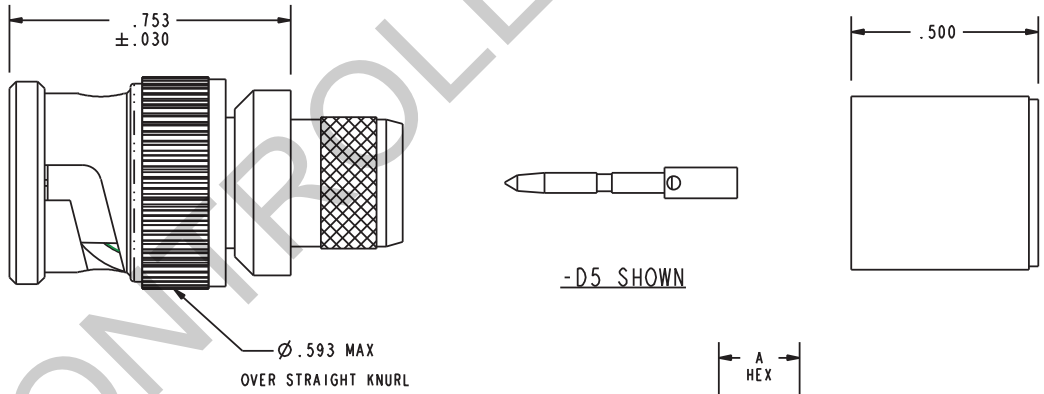

-D5 SHOWN

RECOMMENDED HEX CRIMP

3. EXAMPLE OF A COMPLETE MODEL NO:

UPL2000 - D1

BASIC P/N — DASH NO. PER TABLE

2. RF COAXIAL 75Ω BNC FULL CRIMP CABLE PLUG FOR DIGITAL APPLICATION

1. FINISH: BODY: TFS-1A (NICKEL)
OUTER CONTACT: TFS-1Z (GOLD FLASH Pd Ni)
PIN: TFS-1B (GOLD)
BAYONET SLEEVE: BLACK ELECTROLESS NICKEL

NOTES: UNLESS OTHERWISE SPECIFIED.

N/A	
BLANK LENGTH (REF. ONLY)	
N/A	
SURFACE AREA	

INTERPRET DRAWING PER MIL-STD-100. DIMENSIONS ARE IN INCHES AND INCLUDE FINISH THICKNESS UNLESS OTHERWISE SPECIFIED.

DRN	BPK	5/17/11
CHK	TKo	5/19/11
QUALITY		
MANUF		
APPROVED		
PROJ'E FILE NO.	1-0569	

TOL: UNLESS SPECIFIED. .XX ± .02 .XXX ± .010 .XXXX ± ANGLE ± 1° 00' CRITICAL

MATERIAL:

FINISH:

DO NOT SCALE DWG

cinch CONNECTIVITY SOLUTIONS
Cinch Connectivity Solutions
299 Johnson Ave. Ste. 100
Waseca, MN 56093
1-800-247-8256

TITLE: UPL2000

SIZE	CAGE CODE	DRAWING NO.	REV.
B	14949	1-0569	S

SCALE	DATE	SHEET
2/1	4/23/01	1 OF 2

UNCONTROLLED COPY