Chipsmall Limited consists of a professional team with an average of over 10 year of expertise in the distribution of electronic components. Based in Hongkong, we have already established firm and mutual-benefit business relationships with customers from,Europe,America and south Asia,supplying obsolete and hard-to-find components to meet their specific needs.

With the principle of “Quality Parts,Customers Priority,Honest Operation,and Considerate Service”,our business mainly focus on the distribution of electronic components. Line cards we deal with include Microchip,ALPS,ROHM,Xilinx,Pulse,ON,Everlight and Freescale. Main products comprise IC,Modules,Potentiometer,IC Socket,Relay,Connector.Our parts cover such applications as commercial,industrial, and automotives areas.

We are looking forward to setting up business relationship with you and hope to provide you with the best service and solution. Let us make a better world for our industry!

Contact us

Tel: +86-755-8981 8866 Fax: +86-755-8427 6832
Email & Skype: info@chipsmall.com Web: www.chipsmall.com
Address: A1208, Overseas Decoration Building, #122 Zhenhua RD., Futian, Shenzhen, China

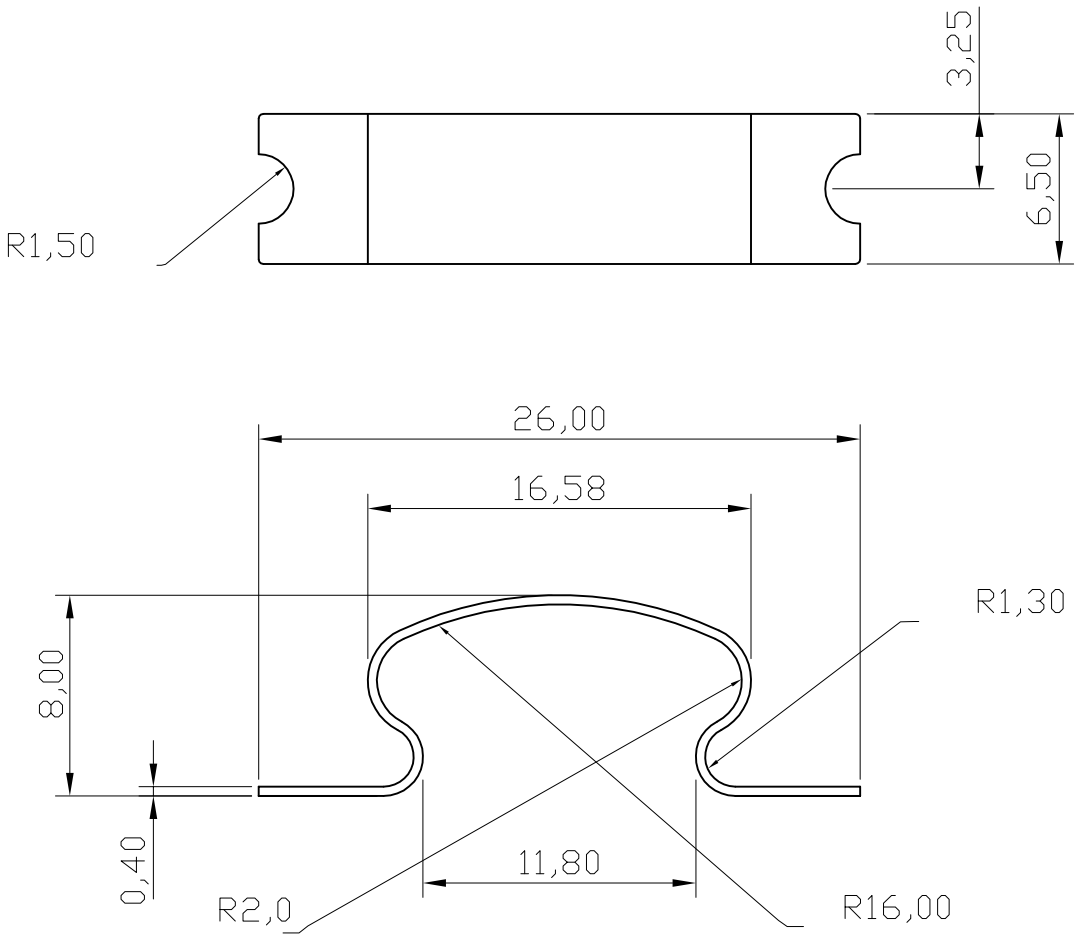

Material: SUS301 T=0.4mm
Finish: Clean
③ Clip For V8511xE1

RoHS compliant
Unit: mm

Scale	Free					Date	Name	Customer-No.
TOLERANCE					Drawn	11.08.2009	Dean	
UNIT	±0.4				Approved	08.07.2016	Amy	ASSMANN WSW-No. V25HK
		③	Add notes	08.07.2016	Amy			
DIM	TOL	②	Modify drawing layout	10.03.2010	Alex			Drawing-No. ASS 0891 HS rev03
Angle	±X	①	Drawn	11.08.2009	Dean			
		Id.	Modification	Date	Name			Replace / Sheet

ASSMANN WSW components