Chipsmall Limited consists of a professional team with an average of over 10 year of expertise in the distribution of electronic components. Based in Hongkong, we have already established firm and mutual-benefit business relationships with customers from,Europe,America and south Asia,supplying obsolete and hard-to-find components to meet their specific needs.

With the principle of “Quality Parts,Customers Priority,Honest Operation,and Considerate Service”,our business mainly focus on the distribution of electronic components. Line cards we deal with include Microchip,ALPS,ROHM,Xilinx,Pulse,ON,Everlight and Freescale. Main products comprise IC,Modules,Potentiometer,IC Socket,Relay,Connector.Our parts cover such applications as commercial,industrial, and automotives areas.

We are looking forward to setting up business relationship with you and hope to provide you with the best service and solution. Let us make a better world for our industry!

Contact us

Tel: +86-755-8981 8866 Fax: +86-755-8427 6832
Email & Skype: info@chipsmall.com Web: www.chipsmall.com
Address: A1208, Overseas Decoration Building, #122 Zhenhua RD., Futian, Shenzhen, China

RoHS compliant

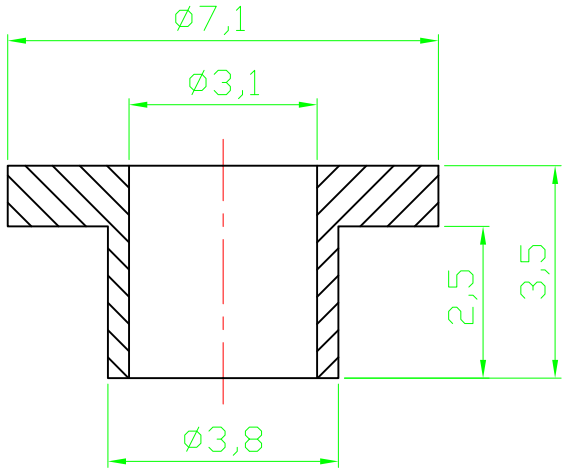

Notes
Material:SR25
Dielectric strength: 380kV/cm
Heat resistance:215°C
Tensile strength: 80N/mm

Scale	1:1						Date	Name
TOLERANCE						Drawn	20.08.2009	Dean
X.	±X					Approved	10.03.2010	Andy
X.X	±X							
X.XX	±X							
DIM	TOL	②	Corrected drawing No.	10.03.2010	Dean			
X.°	±X°							
X.X°	±X°	①	Drawn	20.08.2009	Dean			
Angle	TOL	Id.	Modification	Date	Name			

ASSMANN WSW components

Customer-No.

ASSMANN WSW-No. V5357

Drawing-No. ASS 0489B HS

rev02

Replace

Sheet