Chipsmall Limited consists of a professional team with an average of over 10 year of expertise in the distribution of electronic components. Based in Hongkong, we have already established firm and mutual-benefit business relationships with customers from,Europe,America and south Asia,supplying obsolete and hard-to-find components to meet their specific needs.

With the principle of “Quality Parts,Customers Priority,Honest Operation,and Considerate Service”,our business mainly focus on the distribution of electronic components. Line cards we deal with include Microchip,ALPS,ROHM,Xilinx,Pulse,ON,Everlight and Freescale. Main products comprise IC,Modules,Potentiometer,IC Socket,Relay,Connector.Our parts cover such applications as commercial,industrial, and automotives areas.

We are looking forward to setting up business relationship with you and hope to provide you with the best service and solution. Let us make a better world for our industry!

Contact us

Tel: +86-755-8981 8866 Fax: +86-755-8427 6832
Email & Skype: info@chipsmall.com Web: www.chipsmall.com
Address: A1208, Overseas Decoration Building, #122 Zhenhua RD., Futian, Shenzhen, China

①

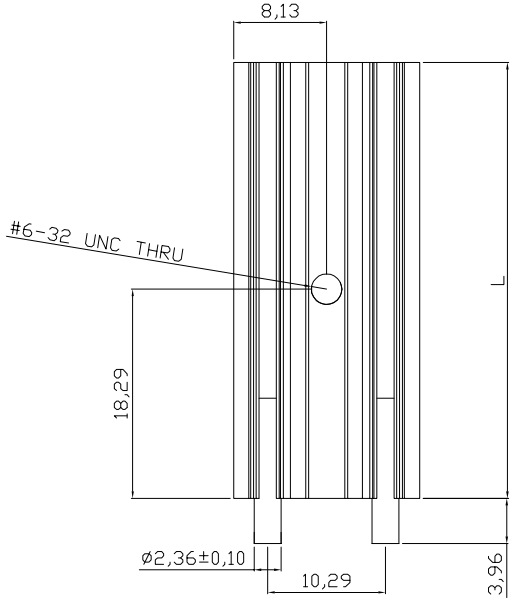

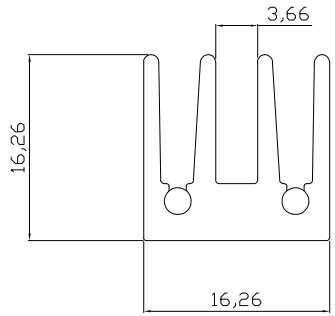

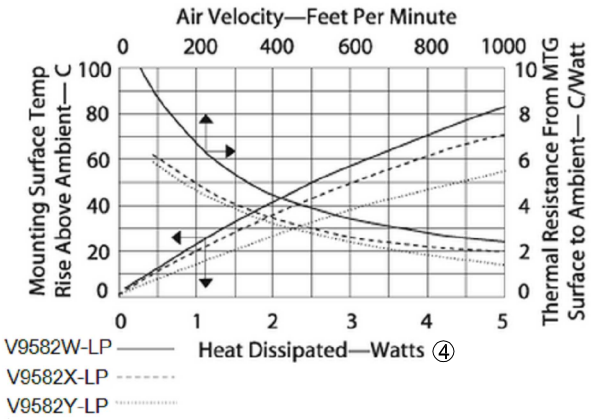

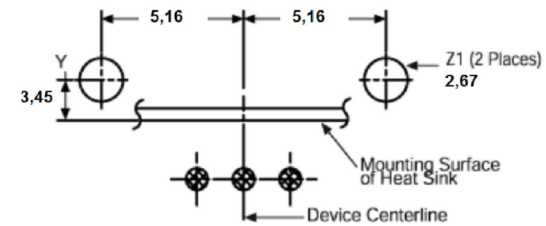

② Recommend PCB Layout

NOTES:
Finish: Black Anodized
Pin: Tin plated
Material: AL6063-T5

③

WSW order code	Length(L)
V9582W-LP	25.4mm
V9582X-LP	38.1mm
V9582Y-LP	50.8mm

RoHS compliant
Unit: mm

Scale	Free
GENERAL TOLERANCE	
±0.3	

Id.	Modification	Date	Name
④	Update the thermal graph	17.08.2016	Amy
③	Add new order codes	16.06.2016	Amy
②	Add thermal graph and PCB layout	24.05.2016	Amy
①	Update to new drawn	05.12.2014	Amy
⓪	Drawn	30.03.2012	Lucas

	Date	Name
Drawn	30.03.2012	Lucas
Approved	17.08.2016	Amy

ASSMANN WSW components

Customer-No.

ASSMANN WSW-No. V9582x-LP

Drawing-No. ASS 1095 HS

rev04

Replace

Sheet

KT1577
HSK0096