Chipsmall Limited consists of a professional team with an average of over 10 year of expertise in the distribution of electronic components. Based in Hongkong, we have already established firm and mutual-benefit business relationships with customers from,Europe,America and south Asia,supplying obsolete and hard-to-find components to meet their specific needs.

With the principle of “Quality Parts,Customers Priority,Honest Operation,and Considerate Service”,our business mainly focus on the distribution of electronic components. Line cards we deal with include Microchip,ALPS,ROHM,Xilinx,Pulse,ON,Everlight and Freescale. Main products comprise IC,Modules,Potentiometer,IC Socket,Relay,Connector.Our parts cover such applications as commercial,industrial, and automotives areas.

We are looking forward to setting up business relationship with you and hope to provide you with the best service and solution. Let us make a better world for our industry!

Contact us

Tel: +86-755-8981 8866 Fax: +86-755-8427 6832
Email & Skype: info@chipsmall.com Web: www.chipsmall.com
Address: A1208, Overseas Decoration Building, #122 Zhenhua RD., Futian, Shenzhen, China

VND5T035AK-E

Double channel high-side driver with analog current sense for 24 V automotive applications

Datasheet — production data

Features

Max transient supply voltage	V_{CC}	58 V
Operating voltage range	V_{CC}	8 to 36 V
Typ on-state resistance (per ch.)	R_{ON}	35 mΩ
Current limitation (typ)	I_{LIM}	42 A
Off-state supply current	I_S	2 µA

- General
  - Very low standby current
  - 3.0 V CMOS compatible input
  - Optimized electromagnetic emission
  - Very low electromagnetic susceptibility
  - Compliant with European directive 2002/95/EC
  - Fault reset standby pin (FR_Stby)
- Diagnostic functions
  - Proportional load current sense
  - High current sense precision for wide range currents
  - Off-state open load detection
  - Output short to V_{CC} detection
  - Overload and short to ground latch off
  - Thermal shutdown latch-off
  - Very low current sense leakage
- Protections
  - Undervoltage shutdown
  - Overvoltage clamp
  - Load current limitation
  - Self limiting of fast thermal transients
  - Protection against loss of ground and loss of V_{CC}
  - Thermal shutdown
  - Electrostatic discharge protection

PowerSSO-24

GAPGCFT00382

Application

All types of resistive, inductive and capacitive loads

Description

The VND5T035AK-E is a monolithic device made using STMicroelectronics® VIPower® technology, intended for driving resistive or inductive loads with one side connected to ground. Active V_{CC} pin voltage clamp protects the device against low energy spikes.

The device integrates an analog current sense which delivers a current proportional to the load current.

Fault conditions such as overload, overtemperature or short to V_{CC} are reported via the current sense pin.

Output current limitation protects the device in overload conditions. The device latches off in case of overload or thermal shutdown.

The device is reset by a low level pass on the fault reset standby pin.

A permanent low level on the inputs and on the fault reset standby pins disables all outputs and sets the device in standby mode.

Contents

1 Block diagram and pin description 5

2 Electrical specifications 7

2.1 Absolute maximum ratings 7

2.2 Thermal data 8

2.3 Electrical characteristics 9

2.4 Electrical characteristics curves 18

3 Application information 20

3.1 GND protection network against reverse battery 20

3.1.1 Solution 1: resistor in the ground line (RGND only) 20

3.1.2 Solution 2: diode (DGND) in the ground line 21

3.2 Load dump protection 21

3.3 MCU I/Os protection 21

3.4 Maximum demagnetization energy (V_{CC} = 24 V) 22

4 Package and PCB thermal data 23

4.1 PowerSSO-24 thermal data 23

5 Package and packing information 26

5.1 ECOPACK® 26

5.2 PowerSSO-24 package information 26

5.3 PowerSSO-24 packing information 28

6 Order codes 29

7 Revision history 30

List of tables

Table 1. Pin function . . . 5
Table 2. Suggested connections for unused and not connected pins . . . 6
Table 3. Absolute maximum ratings . . . 7
Table 4. Thermal data . . . 8
Table 5. Power section . . . 9
Table 6. Switching (VCC = 24 V; Tj = 25 °C) . . . 9
Table 7. Logic inputs . . . 10
Table 8. Protections and diagnostics . . . 11
Table 9. Current sense (8 V < V_{CC} < 36 V) . . . 12
Table 10. Openload detection (V_{FR_Stby} = 5 V) . . . 13
Table 11. Truth table . . . 16
Table 12. Electrical transient requirements (part 1) . . . 17
Table 13. Electrical transient requirements (part 2) . . . 17
Table 14. Electrical transient requirements (part 3) . . . 17
Table 15. Thermal parameters . . . 25
Table 16. PowerSSO-24 mechanical data . . . 27
Table 17. Device summary . . . 29
Table 18. Document revision history . . . 30

List of figures

Figure 1. Block diagram . . . 5
Figure 2. Configuration diagram PowerSSO-24 (top view) . . . 6
Figure 3. Current and voltage conventions . . . 7
Figure 4. Treset definition . . . 10
Figure 5. Tstby definition . . . 11
Figure 6. Current sense delay characteristics . . . 13
Figure 7. Openload off-state delay timing . . . 13
Figure 8. Switching characteristics . . . 14
Figure 9. Output stuck to VCC detection delay time at FRSTBY activation . . . 14
Figure 10. Delay response time between rising edge of ouput current and rising edge of current sense . . . 15
Figure 11. Output voltage drop limitation . . . 15
Figure 12. Device behavior in overload condition . . . 16
Figure 13. Off-state output current . . . 18
Figure 14. High-level input current . . . 18
Figure 15. Input clamp voltage . . . 18
Figure 16. High-level input voltage . . . 18
Figure 17. Low-level input voltage . . . 18
Figure 18. Input hysteresis voltage . . . 18
Figure 19. On-state resistance vs T_{case} . . . 19
Figure 20. On-state resistance vs V_{CC} . . . 19
Figure 21. I_{LIMH} vs T_{case} . . . 19
Figure 22. Turn-on voltage slope . . . 19
Figure 23. Turn-off voltage slope . . . 19
Figure 24. Application schematic . . . 20
Figure 25. Maximum turn-off current versus inductance . . . 22
Figure 26. PowerSSO-24 PC board . . . 23
Figure 27. Rthj-amb vs PCB copper area in open box free air condition (one channel ON) . . . 23
Figure 28. PowerSSO-24 thermal impedance junction ambient single pulse (one channel ON) . . . 24
Figure 29. Thermal fitting model of a double channel HSD in PowerSSO-24 . . . 24
Figure 30. PowerSSO-24 package dimensions . . . 26
Figure 31. PowerSSO-24 tube shipment (no suffix) . . . 28
Figure 32. PowerSSO-24 tape and reel shipment (suffix “TR”) . . . 28

1 Block diagram and pin description

Figure 1. Block diagram

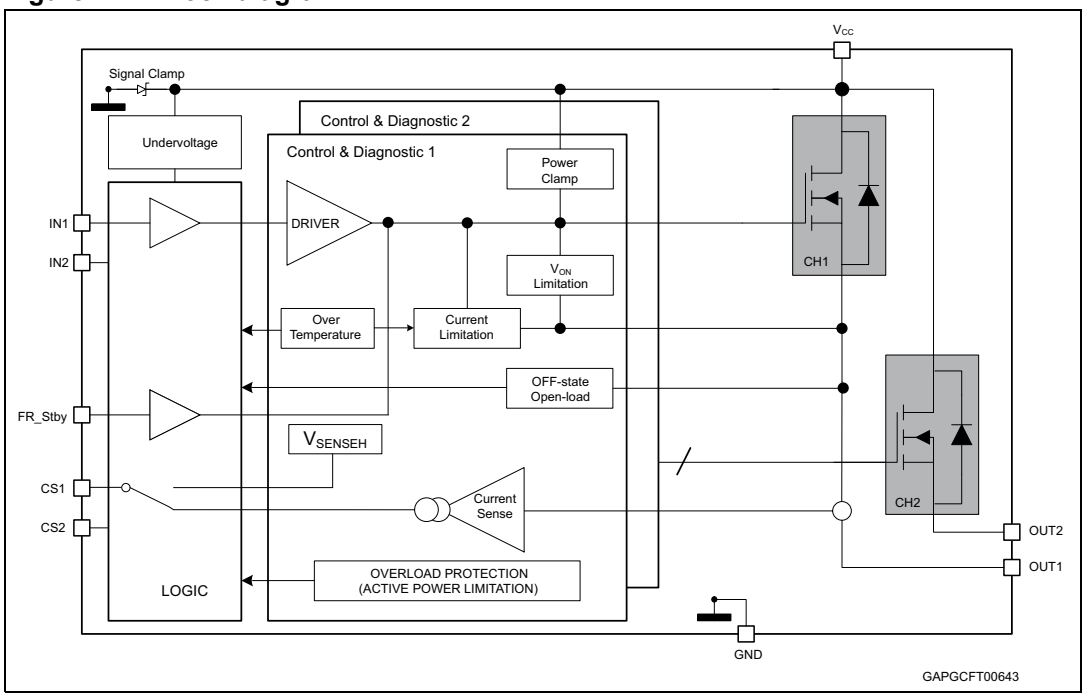

Table 1. Pin function

Name	Function
V_{CC}	Battery connection
$OUT_{1,2}$	Power outputs
GND	Ground connection
$IN_{1,2}$	Voltage controlled input pins with hysteresis, CMOS compatible. They Control output switch state
$CS_{1,2}$	Analog current sense pins, they deliver a current proportional to the load current
FR_Stby	In case of latch-off for overtemperature/overcurrent condition, a low pulse on the FR_Stby pin is needed to reset the channel. The device enters in standby mode if all inputs and the FR_Stby pin are low.

Figure 2. Configuration diagram PowerSSO-24 (top view)

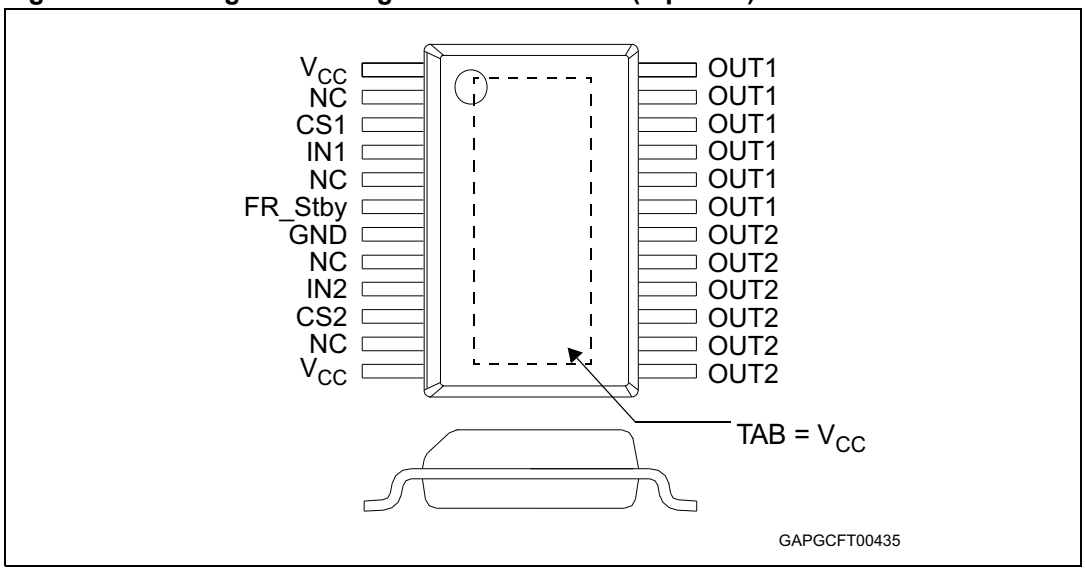

Table 2. Suggested connections for unused and not connected pins

Connection / pin	CurrentSense	N.C.	Output	Input	FR_Stby
Floating	Not allowed	X(1)	X	X	X
To ground	Through 10 KΩ resistor	X	Not allowed	Through 10 KΩ resistor	Through 10 KΩ

1. X: do not care.

2 Electrical specifications

Figure 3. Current and voltage conventions

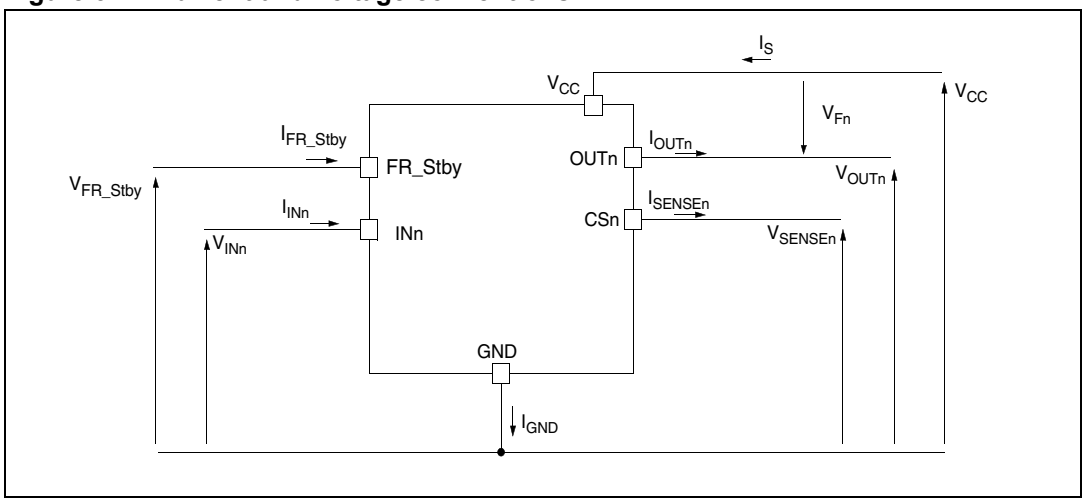

Note: $V_{Fn} = V_{OUTn} - V_{CC}$ *during reverse battery condition.*

2.1 Absolute maximum ratings

Stressing the device above the ratings listed in the *Table 3* may cause permanent damage to the device. These are stress ratings only and operation of the device at these or any other conditions above those indicated in the Operating sections of this specification is not implied. Exposure to the conditions reported in this section for extended periods may affect device reliability.

Table 3. Absolute maximum ratings

Symbol	Parameter	Value	Unit
V_{CC}	DC supply voltage	58	V
$-V_{CC}$	Reverse DC supply voltage	0.3	V
$-I_{GND}$	DC reverse ground pin current	200	mA
I_{OUT}	DC output current	Internally limited	A
$-I_{OUT}$	Reverse DC output current	40	A
I_{IN}	DC input current	-1 to 10	mA
I_{FR_Stby}	Fault reset standby DC input current	-1 to 1.5	mA
$-I_{CSENSE}$	DC reverse CS pin current	200	mA
V_{CSENSE}	Current sense maximum voltage	V_{CC} - 58 to $+V_{CC}$	V
E_{MAX}	Maximum switching energy (L = 2.3 mH; V_{BAT} = 32 V; T_{jstart} = 150 °C; $I_{OUT} = I_{limL\ (typ)}$)	250	mJ

Table 3. Absolute maximum ratings (continued)

Symbol	Parameter	Value	Unit
L_{smax}	Maximum strain inductance in short circuit condition R_L = 300 mΩ, V_{BAT} = 32 V, T_{jstart} = 150 °C, I_{OUT} = I_{LMHmax}	40	µH
V_{ESD}	Electrostatic discharge (Human Body Model: R = 1.5 KΩ; C = 100 pF) – $IN_{1,2}$ – $CS_{1,2}$ – FR_Stby – $OUT_{1,2}$ – V_{CC}	 4000 2000 4000 5000 5000	 V V V V V
V_{ESD}	Charge device model (CDM-AEC-Q100-011)	750	V
T_j	Junction operating temperature	-40 to 150	°C
T_{stg}	Storage temperature	-55 to 150	°C

2.2 Thermal data

Table 4. Thermal data

Symbol	Parameter	Value	Unit
$R_{thj\text{-}case}$	Thermal resistance junction-case (max) (with one channel ON)	2	°C/W
$R_{thj\text{-}amb}$	Thermal resistance junction-ambient (max)	See *Figure 27*	°C/W

2.3 Electrical characteristics

8 V < V_{CC} < 36 V; -40 °C < T_j < 150 °C, unless otherwise specified.

Table 5. Power section

Symbol	Parameter	Test conditions	Min.	Typ.	Max.	Unit
V_{CC}	Operating supply voltage		8	24	36	V
V_{USD}	Undervoltage shutdown			3.5	5	V
$V_{USDhyst}$	Undervoltage shutdown hysteresis			0.5		V
R_{ON}	On-state resistance(1)	I_{OUT} = 3 A; T_j = 25°C		35		mΩ
		I_{OUT} = 3 A; T_j = 150°C			70	
V_{clamp}	Clamp voltage	I_S = 20 mA	58	64	70	V
I_S	Supply current	Off-state; V_{CC} = 24 V; T_j = 25°C; V_{IN} = V_{OUT} = V_{SENSE} = 0 V		2(2)	5(2)	µA
		On-state; V_{CC} = 24 V; V_{IN} = 5 V; I_{OUT} = 0 A		4.2	6	mA
$I_{L(off)}$	Off-state output current	V_{IN} = V_{OUT} = 0 V; V_{CC} = 24 V; T_j = 25°C	0	0.01	3	µA
		V_{IN} = V_{OUT} = 0 V; V_{CC} = 24 V; T_j = 125°C	0		5	
V_F	Output - V_{CC} diode voltage	-I_{OUT} = 3 A; T_j = 150°C			0.7	V

1. For each channel
2. PowerMOS leakage included

Table 6. Switching (V_{CC} = 24 V; T_j = 25 °C)

Symbol	Parameter	Test conditions	Min.	Typ.	Max.	Unit
$t_{d(on)}$	Turn-on delay time	R_L = 8 Ω		46		µs
$t_{d(off)}$	Turn-off delay time	R_L = 8 Ω		54		µs
$dV_{OUT}/dt_{(on)}$	Turn-on voltage slope	R_L = 8 Ω	0.55			V/µs
$dV_{OUT}/dt_{(off)}$	Turn-off voltage slope	R_L = 8 Ω	0.46			V/µs
W_{ON}	Switching energy losses during t_{won}	R_L = 8 Ω		1		mJ
W_{OFF}	Switching energy losses during t_{woff}	R_L = 8 Ω		0.65		mJ

Table 7. Logic inputs

Symbol	Parameter	Test conditions	Min.	Typ.	Max.	Unit
V_{IL}	Input low level voltage				0.9	V
I_{IL}	Low level input current	V_{IN} = 0.9 V	1			µA
V_{IH}	Input high level voltage		2.1			V
I_{IH}	High level input current	V_{IN} = 2.1 V			10	µA
$V_{I(hyst)}$	Input hysteresis voltage		0.25			V
V_{ICL}	Input clamp voltage	I_{IN} = 1 mA	5.5		7	V
		I_{IN} = -1 mA		-0.7		V
$V_{FR\_Stby\_L}$	Fault_reset_standby low level voltage				0.9	V
$I_{FR\_Stby\_L}$	Low level fault_reset_standby current	V_{FR_Stby} = 0.9 V	1			µA
$V_{FR\_Stby\_H}$	Fault_reset_standby high level voltage		2.1			V
$I_{FR\_Stby\_H}$	High level fault_reset_standby current	V_{FR_Stby} = 2.1 V			10	µA
V_{FR_Stby} (hyst)	Fault_reset_standby hysteresis voltage		0.25			V
$V_{FR\_Stby\_CL}$	Fault_reset_standby clamp voltage	I_{FR_Stby} = 15 mA (10 ms)	11		15	V
		I_{FR_Stby} = -1 mA		-0.7		V
t_{reset}	Overload latch-off reset time	See *Figure 4*	2		24	µs
t_{stby}	Standby delay	See *Figure 5*	120		1200	µs

Figure 4. Treset definition

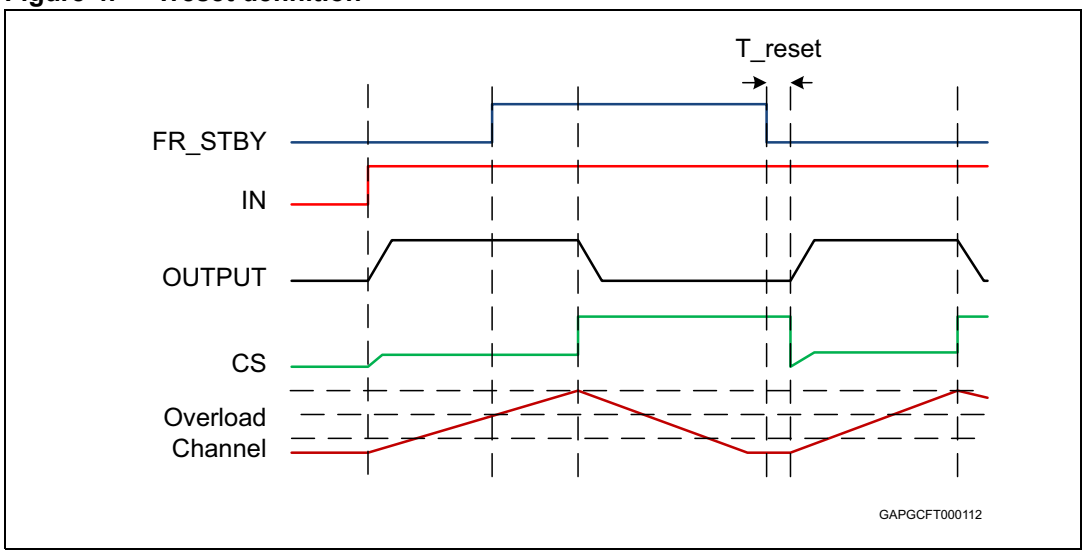

Figure 5. Tstby definition

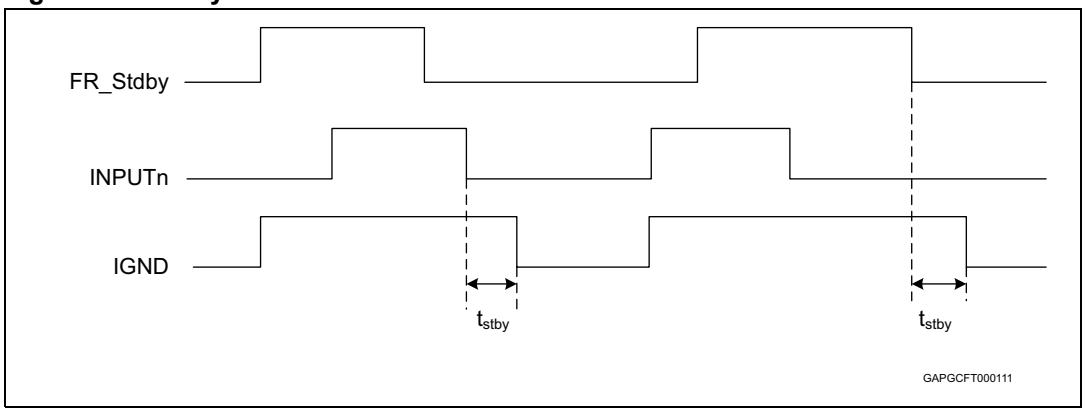

Table 8. Protections and diagnostics

Symbol	Parameter	Test conditions	Min.	Typ.	Max.	Unit
I_{limH}	DC short circuit current	V_{CC} = 24V	30	42	55	A
		5 V < V_{CC} < 36 V			55	A
I_{limL}	Short circuit current during thermal cycling	V_{CC} = 24 V; $T_R < T_j < T_{TSD}$		10.5		A
T_{TSD}	Shutdown temperature		150	175	200	°C
T_R	Reset temperature		T_{RS} + 1	T_{RS} + 5		°C
T_{RS}	Thermal reset of status		135			°C
T_{HYST}	Thermal hysteresis (T_{TSD}-T_R)			7		°C
V_{DEMAG}	Turn-off output voltage clamp	I_{OUT} = 3 A; V_{IN} = 0; L = 6 mH	V_{CC} - 58	V_{CC} - 64	V_{CC} - 70	V
V_{ON}	Output voltage drop limitation	I_{OUT} = 150 mA; T_j = -40°C...+150°C		25		mV

Table 9. Current sense (8 V < V_{CC} < 36 V)

Symbol	Parameter	Test conditions	Min.	Typ.	Max.	Unit
K_1	I_{OUT}/I_{SENSE}	I_{OUT} = 1 A; V_{SENSE} = 2 V; T_j = -40°C...150°C T_j = 25°C...150°C	1952 2080	2960	4150 3840	
dK_1/K_1(1)	Current sense ratio drift	I_{OUT} = 1 A; V_{SENSE} = 2 V; T_j = -40°C to 150°C	-15		15	%
K_2	I_{OUT}/I_{SENSE}	I_{OUT} = 3 A; V_{SENSE} = 4 V; T_j = -40°C...150°C T_j = 25°C...150°C	2490 2585	2930	3440 3265	
dK_2/K_2(1)	Current sense ratio drift	I_{OUT} = 3 A; V_{SENSE} = 4 V; T_j = -40°C to 150°C	-10		+10	%
K_3	I_{OUT}/I_{SENSE}	I_{OUT} = 12 A; V_{SENSE} = 4 V; T_j = -40°C...150°C T_j = 25°C...150°C	2770 2755	2900	3125 3045	
dK_3/K_3(1)	Current sense ratio drift	I_{OUT} = 12 A; V_{SENSE} = 4 V; T_j = -40°C to 150°C	-5		5	%
I_{SENSE0}	Analog sense leakage current	I_{OUT} = 0 A; V_{SENSE} = 0 V; V_{IN} = 0 V; T_j = -40°C...150°C	0		1	µA
		I_{OUT} = 0 A; V_{SENSE} = 0 V; V_{IN} = 5 V; T_j = -40°C...150°C	0		2	µA
V_{SENSE}	Max analog sense output voltage	I_{OUT} = 12 A; R_{SENSE} = 3.9 KΩ	5			V
V_{SENSEH}	Analog sense output voltage in fault condition(2)	V_{CC} = 24 V; R_{SENSE} = 3.9 KΩ	7.5	8.5	9.5	V
I_{SENSEH}	Analog sense output current in fault condition (2)	V_{CC} = 24 V; V_{SENSE} = 5 V	4.9	9	12	mA
$t_{DSENSE2H}$	Delay response time from rising edge of INPUT pins	V_{SENSE} < 4 V; 0.2 A < I_{OUT} < 12 A; I_{SENSE} = 90 % of $I_{SENSE\ max}$; (see *Figure 6*)		200	400	µs
$\Delta t_{DSENSE2H}$	Delay response time between rising edge of output current and rising edge of current sense	V_{SENSE} < 4 V; I_{SENSE} = 90 % of $I_{SENSEMAX}$; I_{OUT} = 90 % of I_{OUTMAX}; I_{OUTMAX} = 3 A (see *Figure 10*)			250	µs
$t_{DSENSE2L}$	Delay response time from falling edge of INPUT pins	V_{SENSE} < 4 V; 0.2 A < I_{OUT} < 12 A; I_{SENSE} = 10 % of $I_{SENSE\ max}$; (see *Figure 6*)		5	20	µs

1. Parameter guaranteed by design; it is not tested.
2. Fault condition includes: power limitation, overtemperature and open load in off-state condition.

Table 10. Openload detection (V_{FR_Stby} = 5 V)

Symbol	Parameter	Test conditions	Min.	Typ.	Max.	Unit
V_{OL}	Openload off-state voltage detection threshold	V_{IN} = 0 V; 8 V < V_{CC} < 36 V	2		4	V
t_{DSTKON}	Output short circuit to V_{CC} detection delay at turn off	See *Figure 7*	180		1800	µs
$I_{L(off2)}$	Off-state output current at V_{OUT} = 4V	V_{IN} = 0 V; V_{SENSE} = 0 V; V_{OUT} rising from 0 V to 4 V	-120		0	µA
td_vol	Delay response from output rising edge to V_{SENSE} rising edge in openload	V_{OUT} = 4 V; V_{IN} = 0 V; V_{SENSE} = 90 % of V_{SENSEH}; R_{SENSE} = 3.9 K			20	µs
t_{DFRSTK_ON}	Output short circuit to V_{CC} detection delay at FRSTBY activation	See *Figure 9*; $Input_{1,2}$ = low			50	µs

Figure 6. Current sense delay characteristics

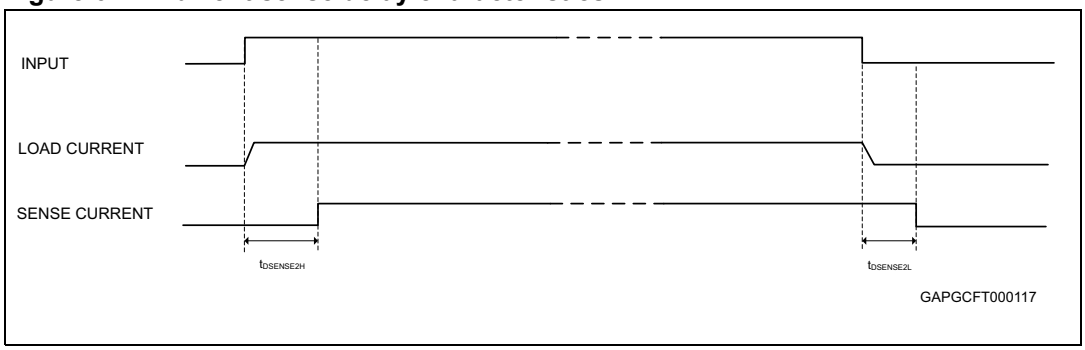

Figure 7. Openload off-state delay timing

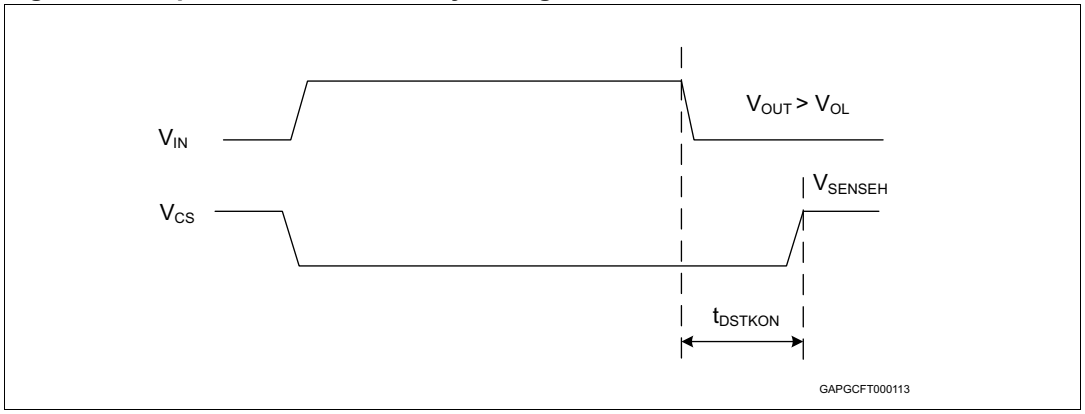

Note: Vfr_stby = high

Figure 8. Switching characteristics

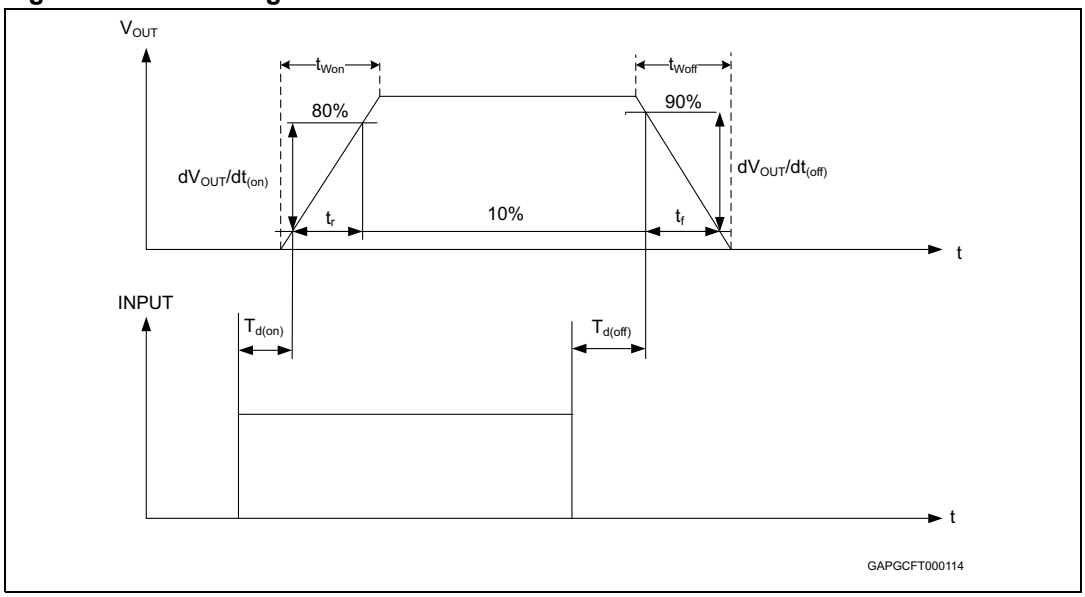

Figure 9. Output stuck to VCC detection delay time at FRSTBY activation

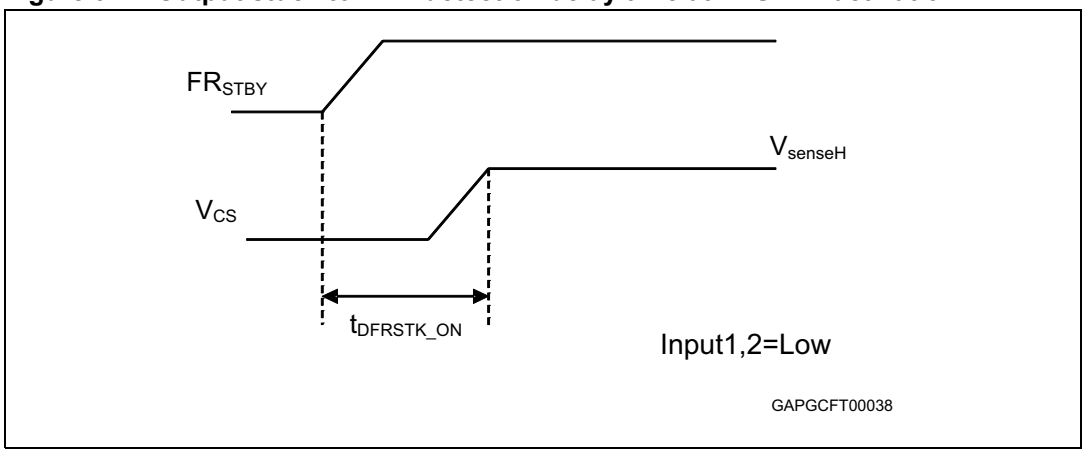

Figure 10. Delay response time between rising edge of ouput current and rising edge of current sense

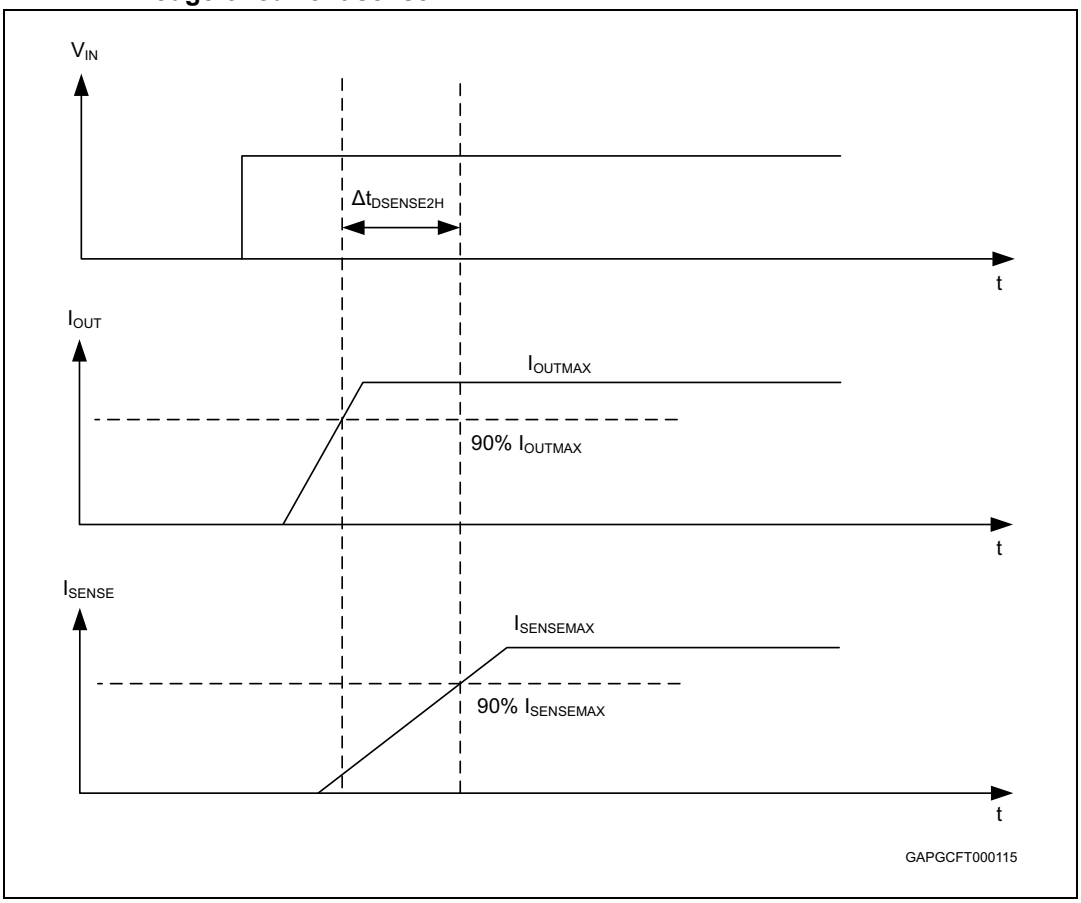

Figure 11. Output voltage drop limitation

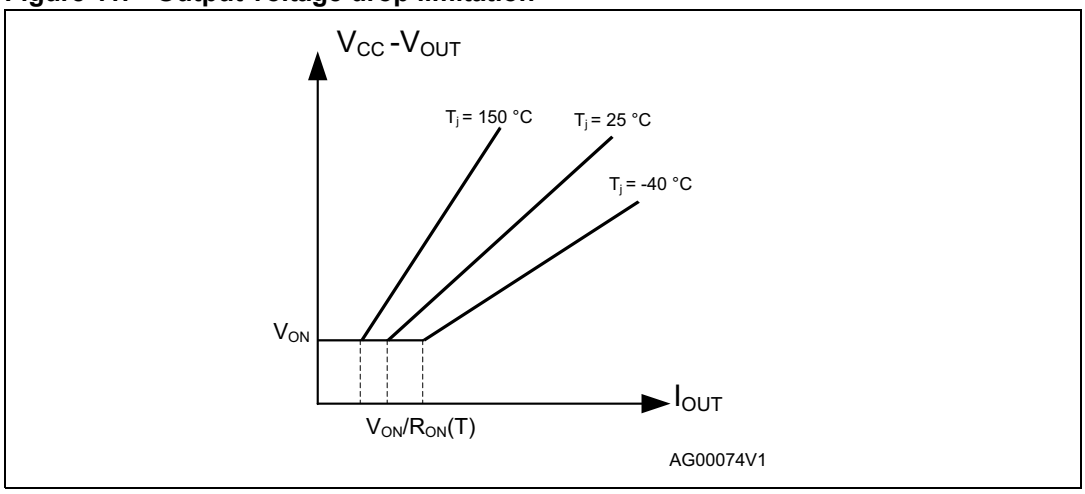

Figure 12. Device behavior in overload condition

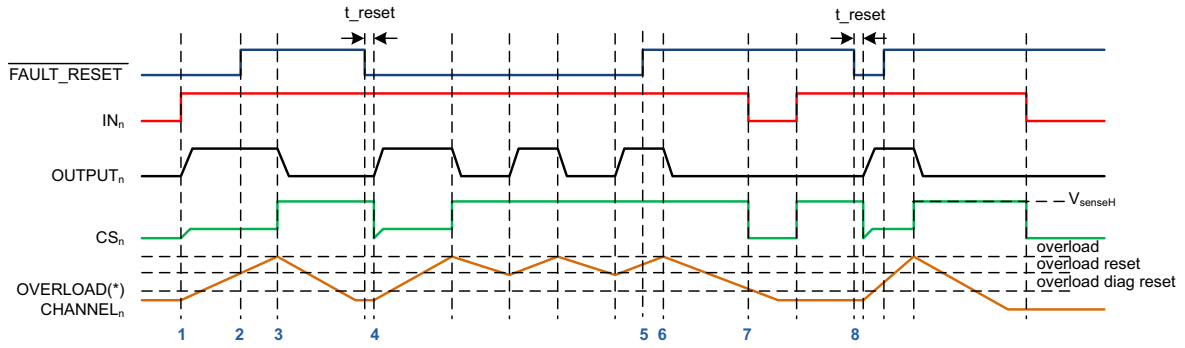

1: $OUTPUT_n$ and CS_n controlled by INn

2: FAULT_RESET from '0' to '1' → no action on CS_n pin

3: overload latch-off. Inn high → CS_n high

4: FAULT_RESET low AND Temp channeln < overload_reset → overload latch reset after t_reset

4 to 5: FAULT_RESET low AND IN_n high → thermal cycling, CS_n high

5: FAULT_RESET high → latch-off reset disabled

6 to 7: overload event and FAULT_RESET high → latch-off, no thermal cycling

7 to 8: overload diagnostic disabled/enabled by the input

8: overload latch-off reset by FAULT_RESET

(*) OVERLOAD = thermal shutdown OR power limitation

GAPGCFT000116

Table 11. Truth table

Conditions	Fault reset standby	Input	Output	Sense
Standby	L	L	L	0
Normal operation	X X	L H	L H	0 Nominal
Overload	X X	L H	L H	0 > Nominal
Overtemperature / short to ground	X L H	L H H	L Cycling Latched	0 V_{SENSEH} V_{SENSEH}
Undervoltage	X	X	L	0
Short to V_{BAT}	L H X	L L H	H H H	0 V_{SENSEH} < Nominal
Open load off-state (with pull-up)	L H X	L L H	H H H	0 V_{SENSEH} 0
Negative output voltage clamp	X	L	Negative	0

Table 12. Electrical transient requirements (part 1)

ISO 7637-2: 2004(E) Test pulse	Test levels (1)		Number of pulses or test times	Burst cycle/pulse repetition time		Delays and impedance
	III	IV				
1	- 450 V	- 600 V	5000 pulses	0.5 s	5 s	1 ms, 50 Ω
2a	+ 37 V	+ 50 V	5000 pulses	0.2 s	5 s	50 µs, 2 Ω
3a	- 150 V	- 200 V	1h	90 ms	100 ms	0.1 µs, 50 Ω
3b	+ 150 V	+ 200 V	1h	90 ms	100 ms	0.1 µs, 50 Ω
4	- 12 V	- 16 V	1 pulse			100 ms, 0.01 Ω
5b(1)	+ 123 V	+ 174 V	1 pulse			350 ms, 1 Ω

1. Valid in case of external load dump clamp: 58 V maximum referred to ground.

Table 13. Electrical transient requirements (part 2)(1)

ISO 7637-2: 2004(E) Test pulse	Test level results	
	III	IV
1	C	C
2a	C	C
3a	C	C
3b(2)	E	E
3b(3)	C	C
4	C	C
5b (4)	C	C

1. In order to guarantee the ISO transient classes a minimum 10KΩ protection resistors are needed on logic pins
2. Without capacitor between V_{CC} and GND.
3. With 10 nF between V_{CC} and GND.
4. External load dump clamp, 58 V maximum, referred to ground.

Table 14. Electrical transient requirements (part 3)

Class	Contents
C	All functions of the device are performed as designed after exposure to disturbance.
E	One or more functions of the device are not performed as designed after exposure to disturbance and cannot be returned to proper operation without replacing the device.

2.4 Electrical characteristics curves

Figure 13. Off-state output current

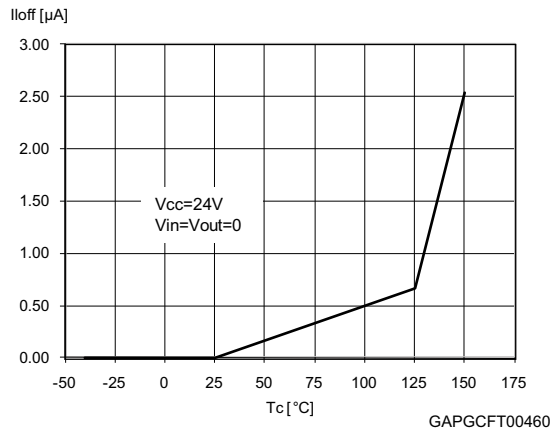

Figure 14. High-level input current

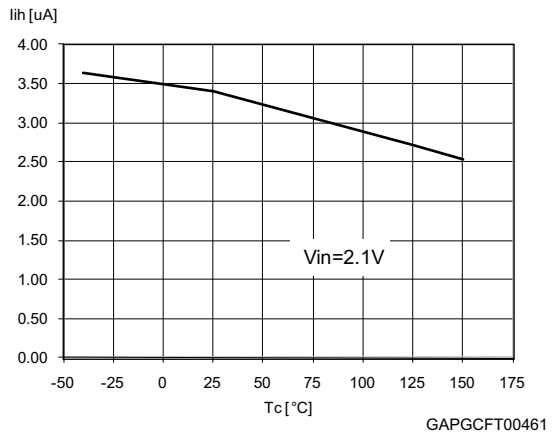

Figure 15. Input clamp voltage

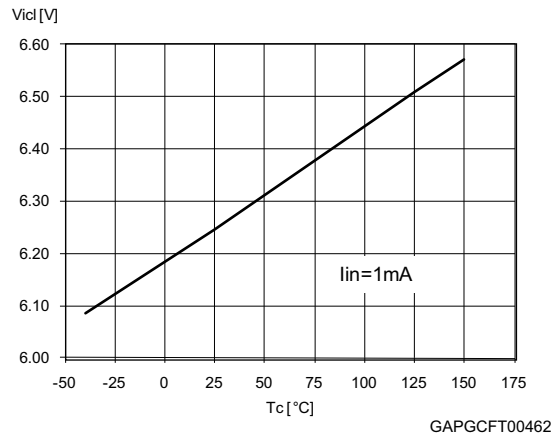

Figure 16. High-level input voltage

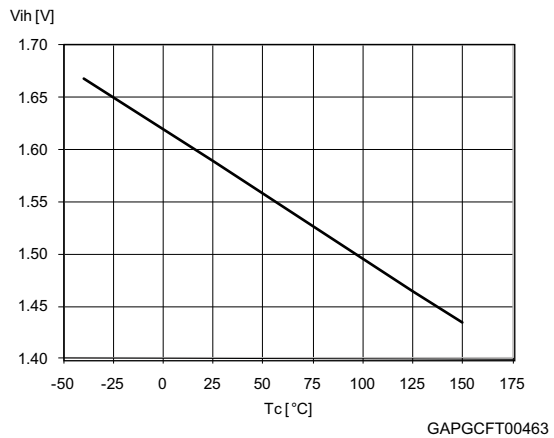

Figure 17. Low-level input voltage

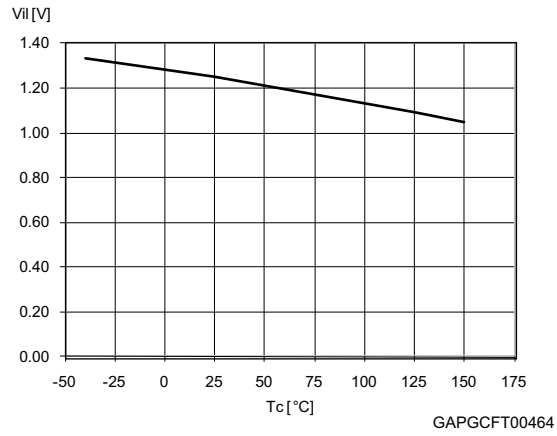

Figure 18. Input hysteresis voltage

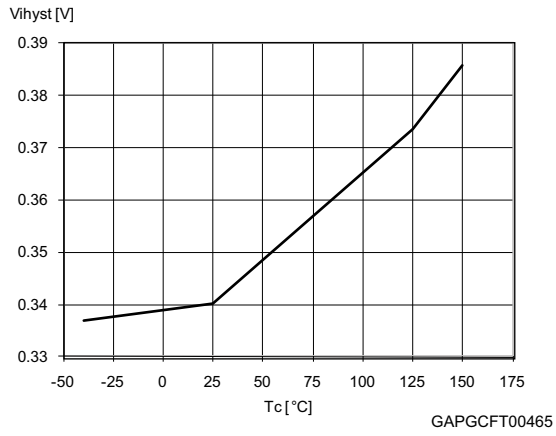

Figure 19. On-state resistance vs T_{case}

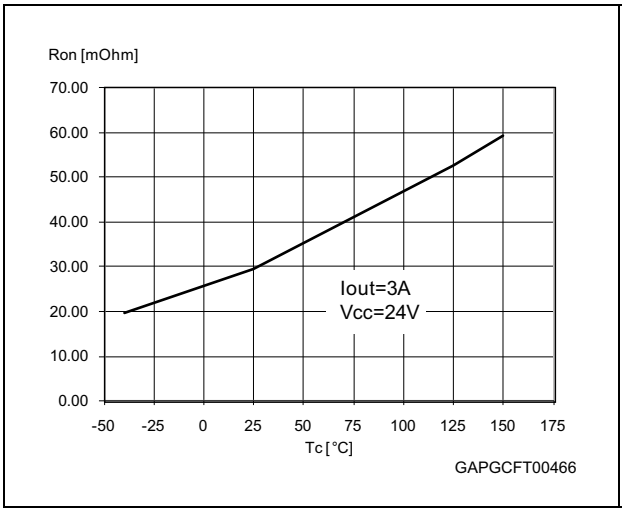

Figure 20. On-state resistance vs V_{CC}

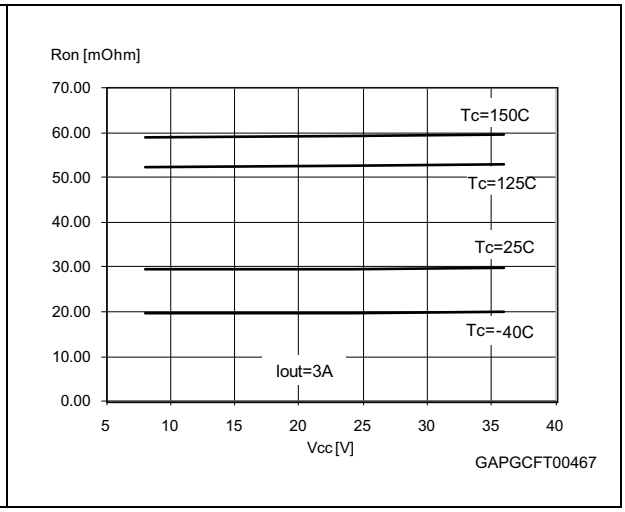

Figure 21. I_{LIMH} vs T_{case}

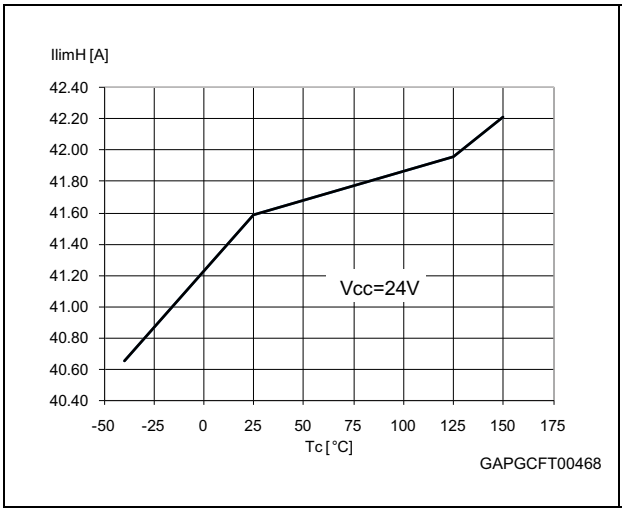

Figure 22. Turn-on voltage slope

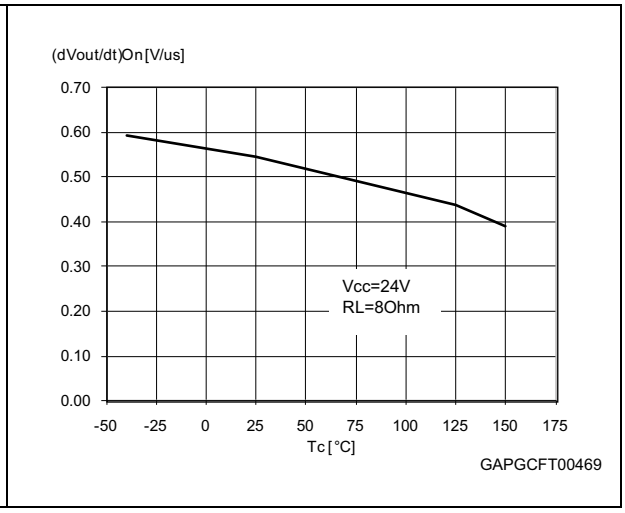

Figure 23. Turn-off voltage slope

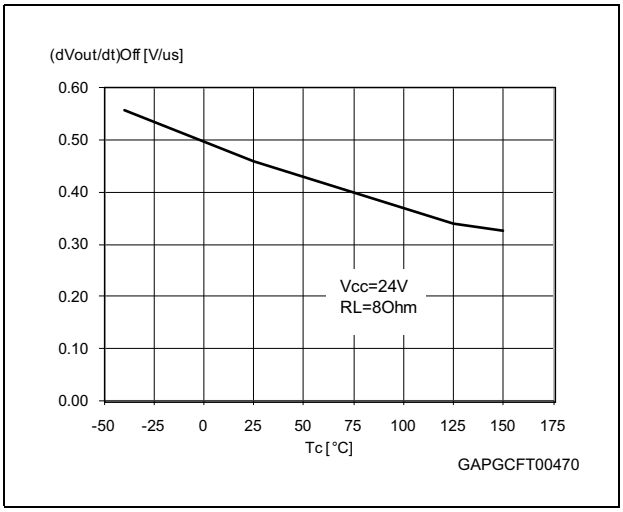

3 Application information

Figure 24. Application schematic

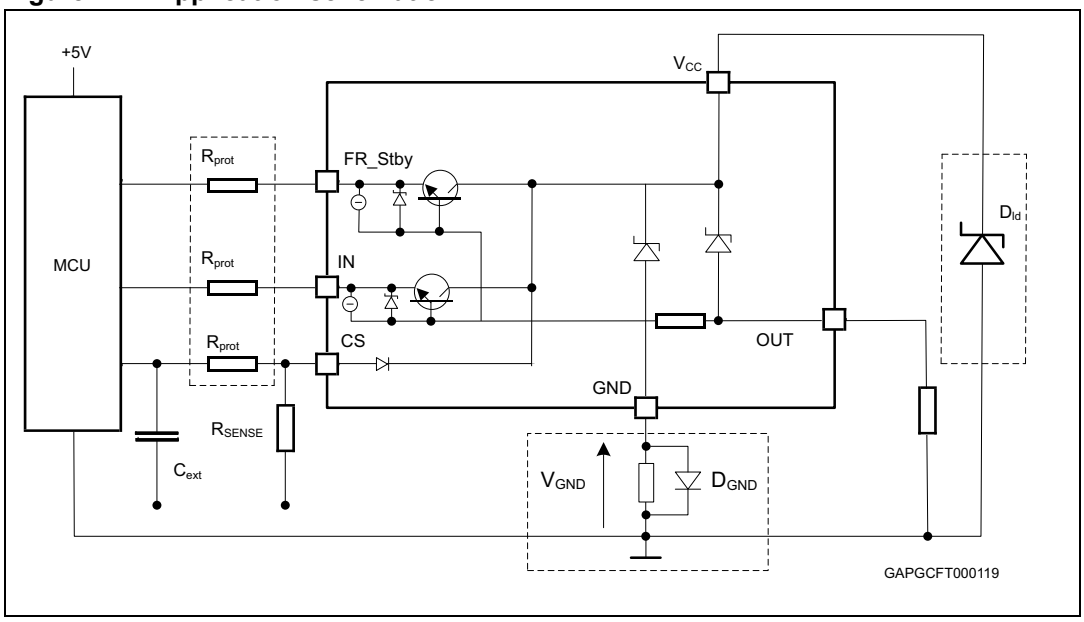

3.1 GND protection network against reverse battery

3.1.1 Solution 1: resistor in the ground line (R_{GND} only)

This solution can be used with any type of load.

The following is an indication on how to dimension the R_{GND} resistor.

1. $R_{GND} \leq 600\ mV / (I_{S(on)max})$.
2. $R_{GND} \geq (-V_{CC}) / (-I_{GND})$

where $-I_{GND}$ is the DC reverse ground pin current and can be found in the absolute maximum rating section of the device datasheet.

Power dissipation in R_{GND} (when $V_{CC} < 0$: during reverse battery situations) is:

$P_D = (-V_{CC})^2 / R_{GND}$

This resistor can be shared amongst several different HSDs. Please note that the value of this resistor should be calculated with formula (1) where $I_{S(on)max}$ becomes the sum of the maximum on-state currents of the different devices.

Please note that if the microprocessor ground is not shared by the device ground then the R_{GND} produces a shift ($I_{S(on)max} * R_{GND}$) in the input thresholds and the status output values. This shift varies depending on how many devices are ON in case of several high side drivers sharing the same R_{GND}.

If the calculated power dissipation leads to a large resistor or several devices have to share the same resistor then ST suggests Solution 2 is used (see below).

3.1.2 Solution 2: diode (D_{GND}) in the ground line

A resistor (R_{GND} = 4.7 kΩ) should be inserted in parallel to D_{GND} if the device drives an inductive load.

This small signal diode can be safely shared amongst several different HSDs. Also in this case, the presence of the ground network produces a shift (≈600 mV) in the input threshold and in the status output values, if the microprocessor ground is not common to the device ground. This shift does not vary if more than one HSD shares the same diode/resistor network.

3.2 Load dump protection

D_{ld} is necessary (Voltage Transient Suppressor) if the load dump peak voltage exceeds to V_{CC} maximum DC rating. The same applies if the device is subject to transients on the V_{CC} line that are greater than the ones shown in the ISO T/R 7637/2 table.

3.3 MCU I/Os protection

If a ground protection network is used and negative transient is present on the V_{CC} line, the control pins are pulled negative. ST suggests that a resistor (R_{prot}) have to be inserted in line to prevent the microcontroller I/Os pins to latch-up.

The value of these resistors is a compromise between the leakage current of the microcontroller and the current required by the HSD I/Os (Input levels compatibility) with the latch-up limit of microcontroller I/Os.

$-V_{CCpeak}/I_{latchup} \leq R_{prot} \leq (V_{OH\mu C}-V_{IH}-V_{GND}) / I_{IHmax}$

Calculation example:

For V_{CCpeak}= -600 V and $I_{latchup} \geq 20$ mA; $V_{OH\mu C} \geq 4.5$ V

30 kΩ ≤ R_{prot} ≤ 180 kΩ.

Recommended R_{prot} value is 60 kΩ.

3.4 Maximum demagnetization energy (V_{CC} = 24 V)

Figure 25. Maximum turn-off current versus inductance

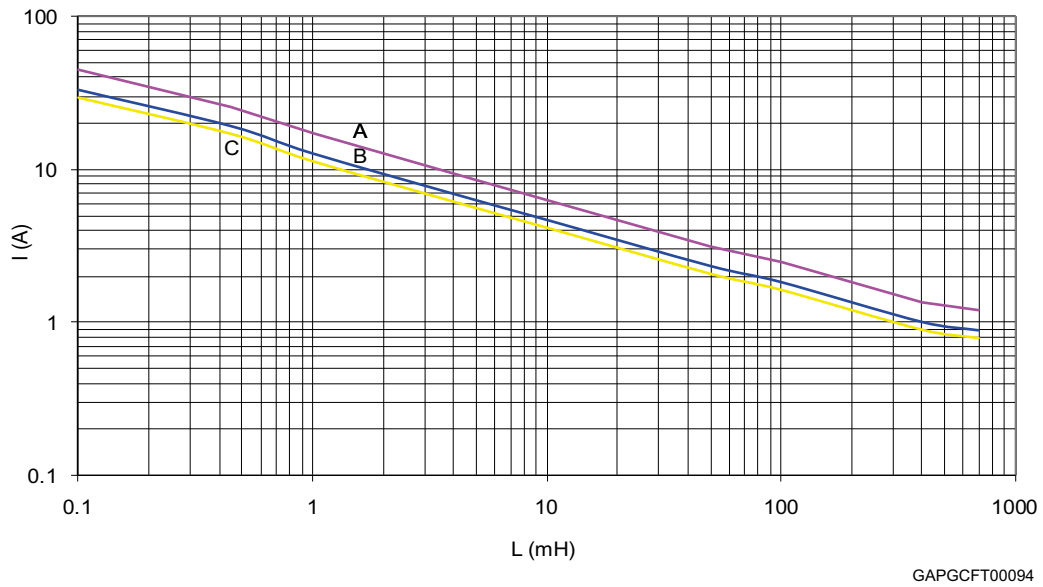

A: T_{jstart} = 150°C single pulse

B: T_{jstart} = 100°C repetitive pulse

C: T_{jstart} = 125°C repetitive pulse

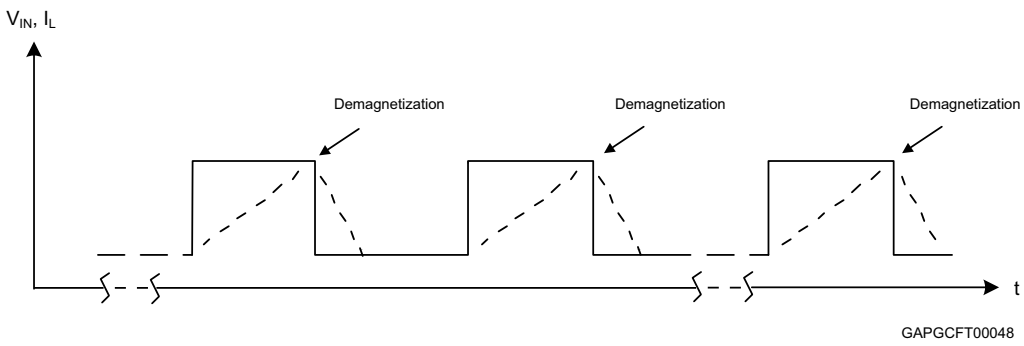

Note: Values are generated with R_L =0 Ω. In case of repetitive pulses, T_{jstart} (at the beginning of each demagnetization) of every pulse must not exceed the temperature specified above for curves A and B.

4 Package and PCB thermal data

4.1 PowerSSO-24 thermal data

Figure 26. PowerSSO-24 PC board

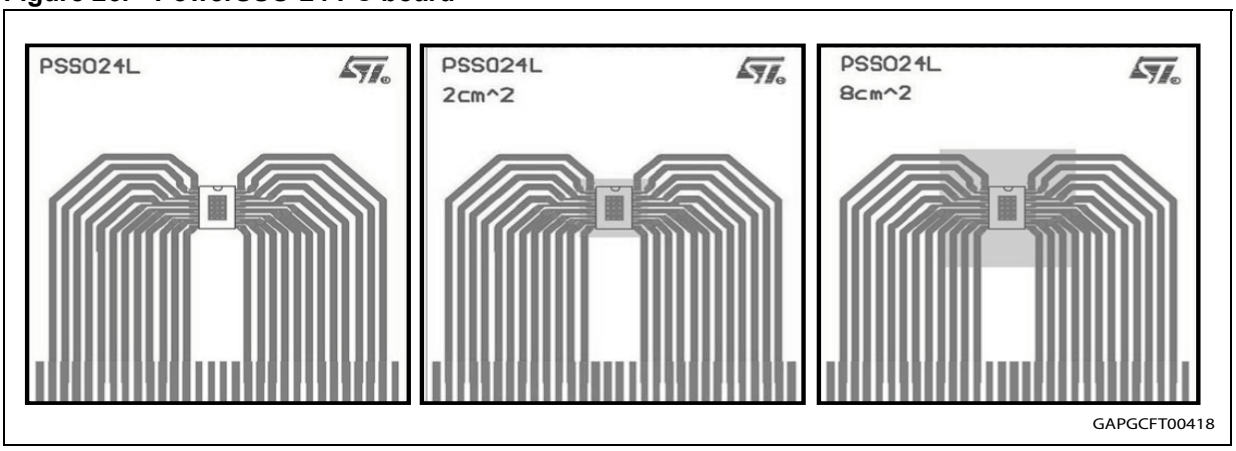

1. Layout condition of R_{th} and Z_{th} measurements (PCB: double layer, thermal vias, FR4 area = 77 mm x 86 mm, PCB thickness = 1.6 mm, Cu thickness = 70 µm (front and back side), Copper areas: from minimum pad lay-out to 8 cm^2).

Figure 27. $R_{thj\text{-}amb}$ vs PCB copper area in open box free air condition (one channel ON)

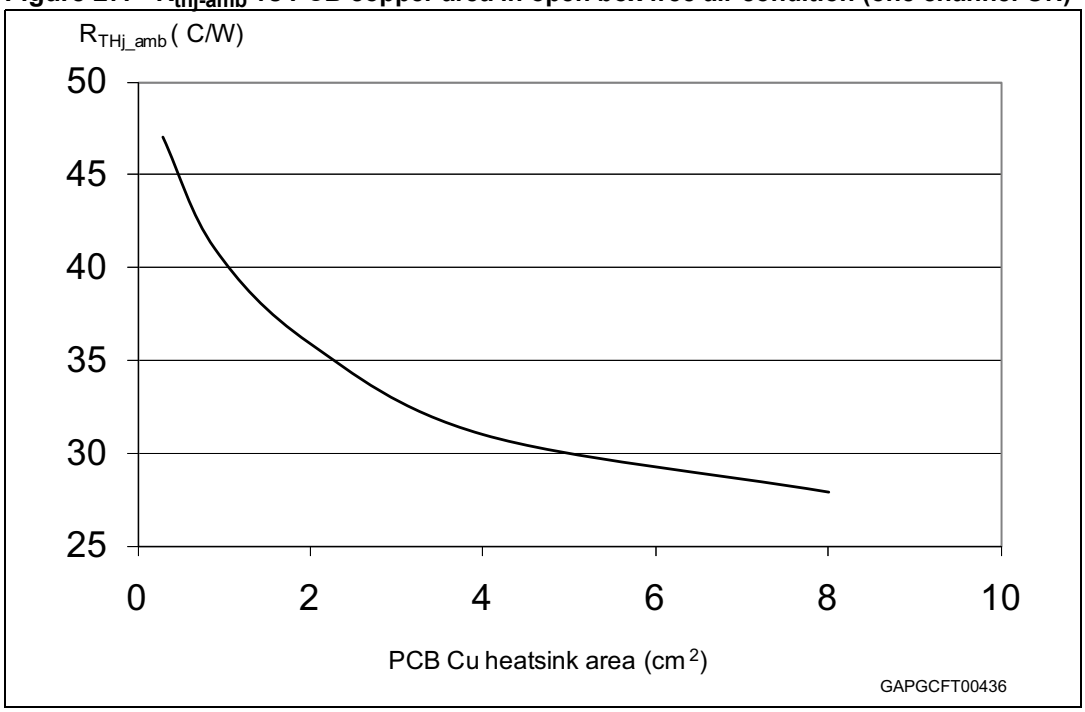

Figure 28. PowerSSO-24 thermal impedance junction ambient single pulse (one channel ON)

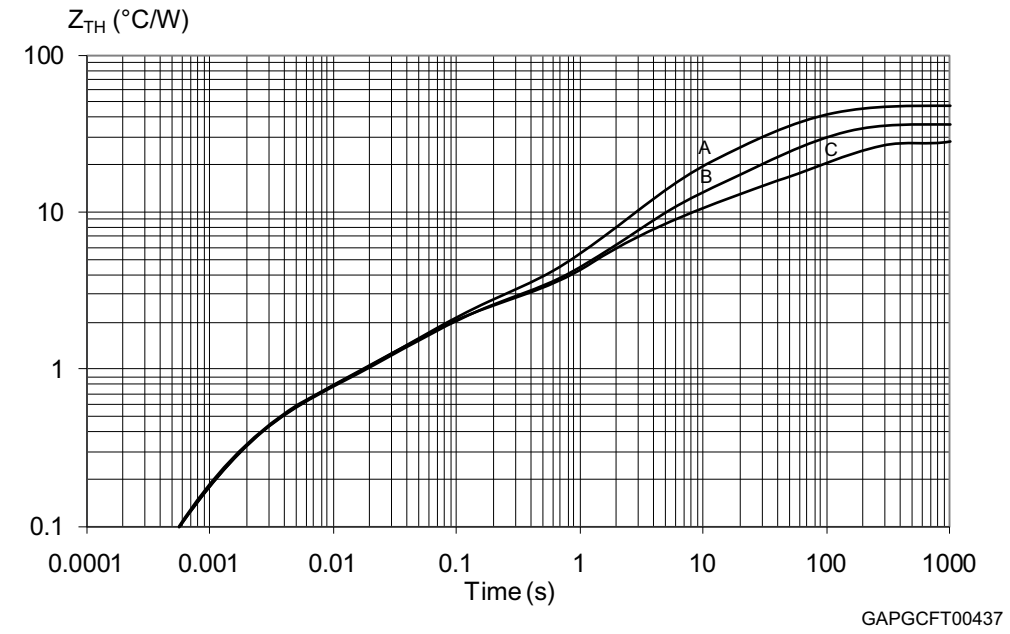

A: Cu = Footprint **B**: Cu = 2 cm^2 **C**: Cu = 8 cm^2

Figure 29. Thermal fitting model of a double channel HSD in PowerSSO-24

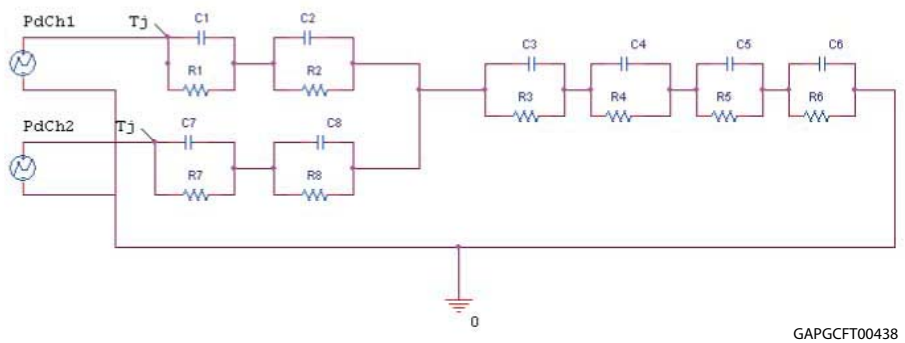

1. The fitting model is a semplified thermal tool and is valid for transient evolutions where the embedded protections (power limitation or thermal cycling during thermal shutdown) are not triggered

Equation 1: Pulse calculation formula

$$Z_{TH\delta} = R_{TH} \cdot \delta + Z_{THtp}(1 - \delta)$$

where $\delta = t_P/T$

Table 15. Thermal parameters

Area/island (cm^2)	Footprint	2	8
R1 (°C/W)	0,5	—	—
R2 (°C/W)	0.75	—	—
R3 (°C/W)	1	—	—
R4 (°C/W)	7.7	—	—
R5 (°C/W)	9	9	8
R6 (°C/W)	28	17	10
R7 (°C/W)	0,5	—	—
R8 (°C/W)	0.75	—	—
C1 (W.s/°C)	0,005	—	—
C2 (W.s/°C)	0,05	—	—
C3 (W.s/°C)	0,1	—	—
C4 (W.s/°C)	0,5	—	—
C5 (W.s/°C)	1	4	9
C6 (W.s/°C)	2.2	5	17
C7 (W.s/°C)	0,005	—	—
C8 (W.s/°C)	0,05	—	—