Chipsmall Limited consists of a professional team with an average of over 10 year of expertise in the distribution of electronic components. Based in Hongkong, we have already established firm and mutual-benefit business relationships with customers from,Europe,America and south Asia,supplying obsolete and hard-to-find components to meet their specific needs.

With the principle of “Quality Parts,Customers Priority,Honest Operation,and Considerate Service”,our business mainly focus on the distribution of electronic components. Line cards we deal with include Microchip,ALPS,ROHM,Xilinx,Pulse,ON,Everlight and Freescale. Main products comprise IC,Modules,Potentiometer,IC Socket,Relay,Connector.Our parts cover such applications as commercial,industrial, and automotives areas.

We are looking forward to setting up business relationship with you and hope to provide you with the best service and solution. Let us make a better world for our industry!

Contact us

Tel: +86-755-8981 8866 Fax: +86-755-8427 6832
Email & Skype: info@chipsmall.com Web: www.chipsmall.com
Address: A1208, Overseas Decoration Building, #122 Zhenhua RD., Futian, Shenzhen, China

THIS COPY IS PROVIDED ON A RESTRICTED BASIS AND IS NOT TO BE USED IN ANY WAY DETRIMENTAL TO THE INTERESTS OF PANDUIT CORP.

PANDUIT PART NO.	WEIGHT
WCM35CC	.03 LBS / [14.1 G]

NOTES:
1. SEE CURRENT CATALOG FOR ADDITIONAL PART NUMBER SUFFIXES TO INDICATE COLOR AND/OR PACKAGE QUANTITY.
2. THIS PRODUCT IS INTENDED TO BE USED WITH PANDUIT TYPE WCM35 RACEWAY.
3. DIMENSIONS IN PARENTHESIS ARE IN METRIC.

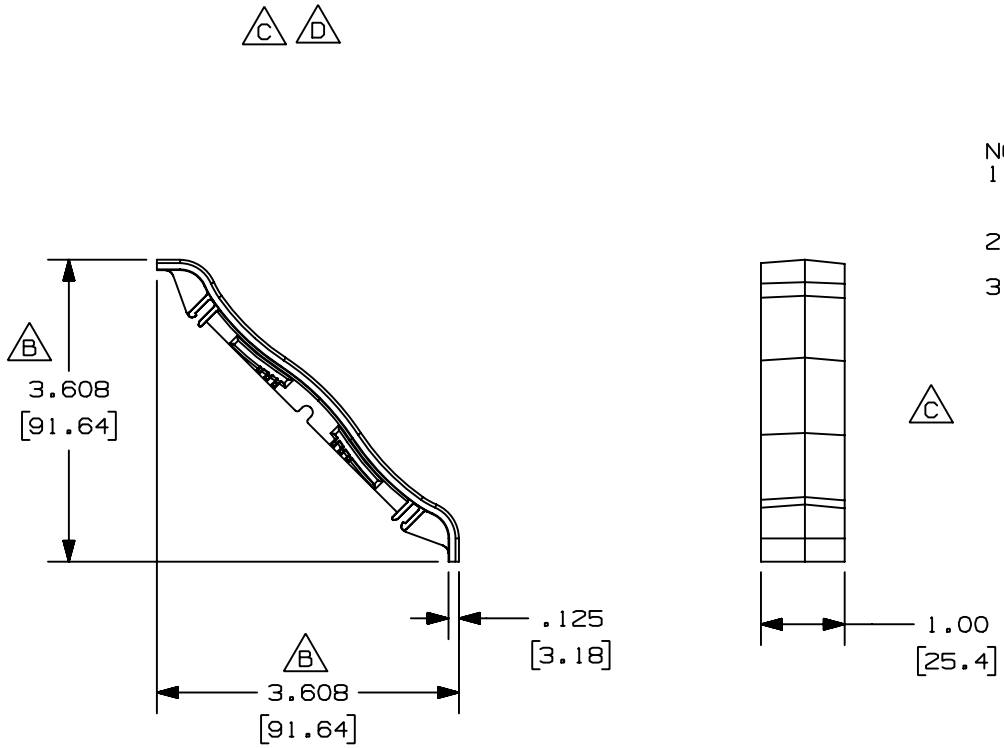

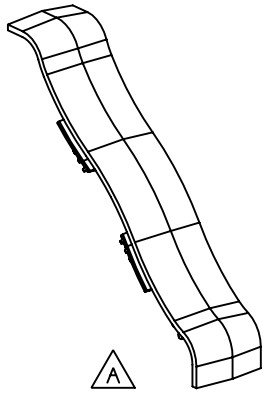

REV	DATE	BY	CHK	DESCRIPTION	ECN	CHK	CUST	SUP
-	--------	---	---	D. REMOVED VIEW	--------	---	---	
2	09-22-03	JHEP	BKR	C. REMOVED DIMENSION B. ADDED DIMENSION	38078-02	RGRO	RGRO	
-	--------	---	---	RELEASED TO PRODUCTION	--------	---	---	
1	10-31-02	JBN	BKR	A. REVISED GEOMETRY	38078-02	RGRO	RGRO	
R	05-07-02	JBN	CSH	DRAWING RELEASED				

CAD FILENAME/LAYERS: D38078BA_DC_WCM35CC_10B.PRT

PANDUIT CORP. TINLEY PARK, ILLINOIS

3.5 INCH COVE MOLDING
COVER COUPLER FITTING (WCM35CC)
CUSTOMER DRAWING

UNLESS OTHERWISE SPECIFIED, DIMENSIONAL TOLERANCES ARE:
(.X) ± (.XXX) ±.015 [.38]
(.XX)±.03 [.8] ANGLES ±

UNLESS OTHERWISE SPECIFIED, ALL DIMENSIONS ARE GIVEN IN INCHES, THIRD ANGLE PROJECTION.

DRAWN BY: JBN
DATE: 05-07-02
CHK'D: CSH
MAT'L: PVC
SCALE: NONE
DRAWING NO.: 38078-02
DWG SIZE: A