Chipsmall Limited consists of a professional team with an average of over 10 year of expertise in the distribution of electronic components. Based in Hongkong, we have already established firm and mutual-benefit business relationships with customers from,Europe,America and south Asia,supplying obsolete and hard-to-find components to meet their specific needs.

With the principle of “Quality Parts,Customers Priority,Honest Operation,and Considerate Service”,our business mainly focus on the distribution of electronic components. Line cards we deal with include Microchip,ALPS,ROHM,Xilinx,Pulse,ON,Everlight and Freescale. Main products comprise IC,Modules,Potentiometer,IC Socket,Relay,Connector.Our parts cover such applications as commercial,industrial, and automotives areas.

We are looking forward to setting up business relationship with you and hope to provide you with the best service and solution. Let us make a better world for our industry!

Contact us

Tel: +86-755-8981 8866 Fax: +86-755-8427 6832
Email & Skype: info@chipsmall.com Web: www.chipsmall.com
Address: A1208, Overseas Decoration Building, #122 Zhenhua RD., Futian, Shenzhen, China

THIS COPY IS PROVIDED ON A RESTRICTED BASIS AND IS NOT TO BE USED IN ANY WAY DETRIMENTAL TO THE INTERESTS OF PANDUIT CORP.

PANDUIT PART NUMBER	APPROXIMATE WEIGHT OF A PAIR OF SPLICE CONNECTORS
WGSPL1218	.68 lb (307g)

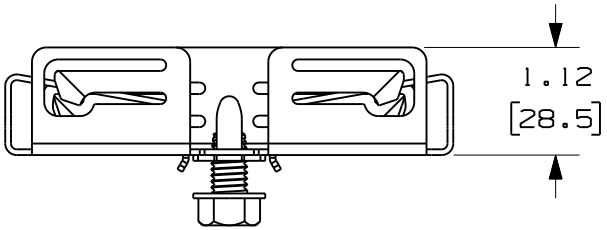

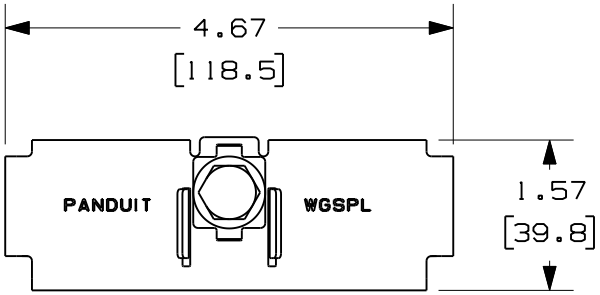

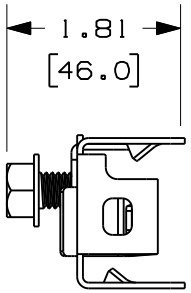

EACH WGSPL1218 PACKAGE CONTAINS A PAIR OF THE ABOVE ASSEMBLY.

NOTES:

1. SEE CURRENT CATALOG FOR ADDITIONAL PART SUFFIXES TO INDICATE PACKAGE QUANTITY.
2. THE WYR-GRID SPLICE CONNECTOR IS USED TO CONNECT WYR-GRID PATHWAY SECTIONS END TO END TO CREATE A CONTINUOUS PATHWAY.
3. THE WYR-GRID SPLICE CONNECTOR PACKAGE CONTAINS A PAIR OF SPLICES CONNECTORS.

   EACH SPLICE CONNECTOR CONSISTS OF:
   ONE (1) WYR-GRID SPICE CONNECTOR
   ONE (1) 3/8-16 X 5/8 HEX HEAD WASHER HEAD TAPPING SCREW (GREEN)
4. DIMENSIONS IN PARENTHESES ARE METRIC.

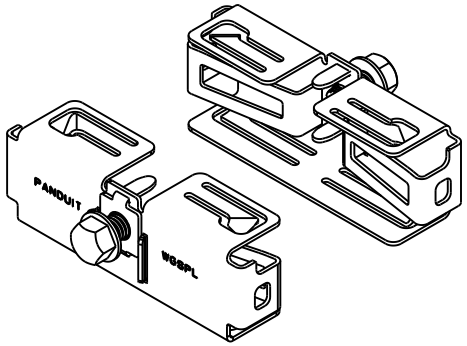

REV	DATE	BY	CHK	DESCRIPTION	ECN	-	R	CUST	SUP
R	5/19/10	JCST	DWW	DRAWING RELEASED	-----		--		

CAD FILENAME/LAYERS: 09D017AF_DC_WGSPL/02A

PANDUIT CORP. TINLEY PARK, ILLINOIS

WYR-GRID SPLICE CONNECTOR FOR 12" & 18" WIDTHS (WGSPL1218)
CUSTOMER DRAWING

UNLESS OTHERWISE SPECIFIED, DIMENSIONAL TOLERANCES ARE:
(.X) ± (.XXX) ±
(.XX) ±.05 (1.3) ANGLES ±

UNLESS OTHERWISE SPECIFIED, ALL DIMENSIONS ARE GIVEN IN INCHES, THIRD ANGLE PROJECTION.

DRAWN BY: JCST
DATE: 05/19/10
CHK'D: DWW
MAT'L: STEEL
SCALE: .5X
DRAWING NO.: 09D017AF-DC
DWG SIZE: A