Chipsmall Limited consists of a professional team with an average of over 10 year of expertise in the distribution of electronic components. Based in Hongkong, we have already established firm and mutual-benefit business relationships with customers from,Europe,America and south Asia,supplying obsolete and hard-to-find components to meet their specific needs.

With the principle of “Quality Parts,Customers Priority,Honest Operation,and Considerate Service”,our business mainly focus on the distribution of electronic components. Line cards we deal with include Microchip,ALPS,ROHM,Xilinx,Pulse,ON,Everlight and Freescale. Main products comprise IC,Modules,Potentiometer,IC Socket,Relay,Connector.Our parts cover such applications as commercial,industrial, and automotives areas.

We are looking forward to setting up business relationship with you and hope to provide you with the best service and solution. Let us make a better world for our industry!

# Contact us

Tel: +86-755-8981 8866 Fax: +86-755-8427 6832
Email & Skype: info@chipsmall.com Web: www.chipsmall.com
Address: A1208, Overseas Decoration Building, #122 Zhenhua RD., Futian, Shenzhen, China

THIS COPY IS PROVIDED ON A RESTRICTED BASIS AND IS NOT TO BE USED IN ANY WAY DETRIMENTAL TO THE INTERESTS OF PANDUIT CORP.

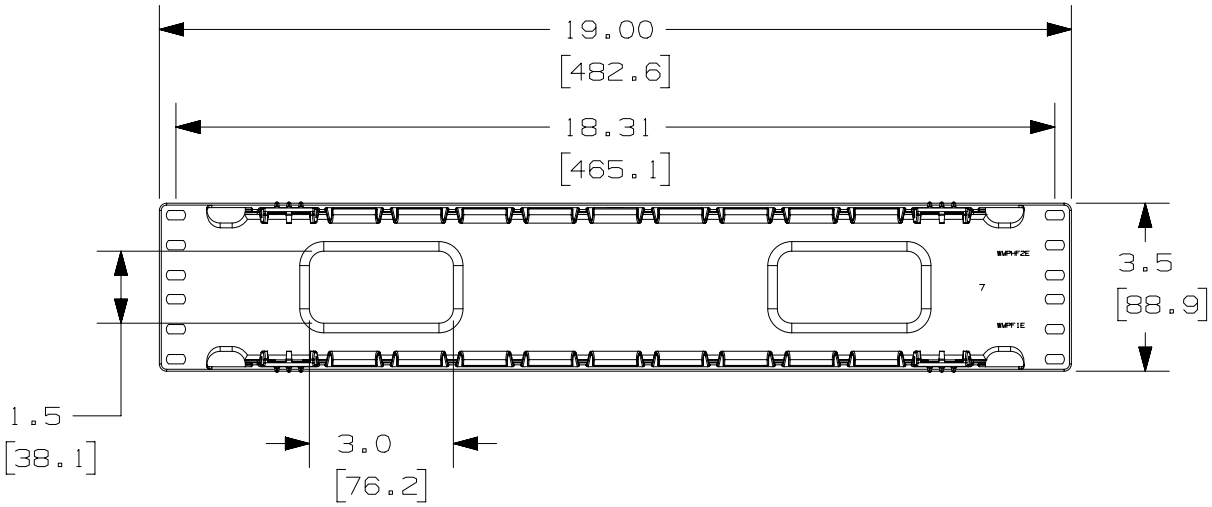


| PANDUIT P/N | WEIGHT |
|---|---|
| WMPHF2E | 1.4 LBS/EACH<br>635 g/EACH |

NOTES:
1. DESIGNED FOR MOUNTING ON 19" EIA RACKS.
2. COMPONENTS:
   - 1- MANAGER
   - 1- 19.375" DUAL HINGED COVER
   - 4- #12-24 x 2" SCREWS
   - 2- BEND RADIUS CLIPS
3. DIMENSIONS IN PARENTHESES ARE METRIC.

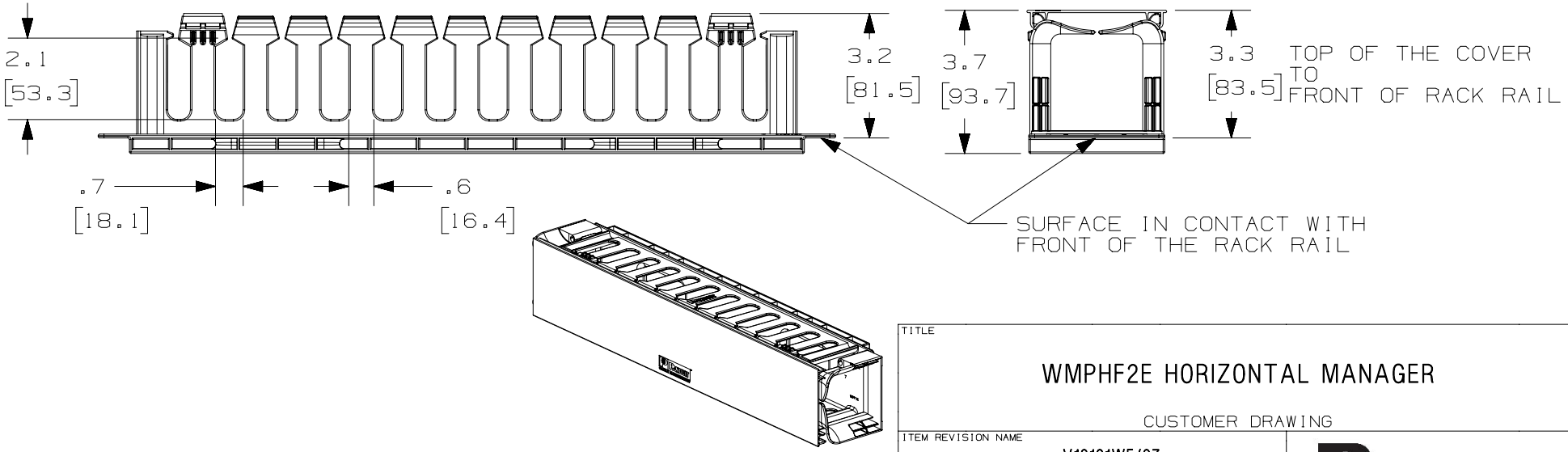




| REV | DATE | BY | CHK | APR | DESCRIPTION | ECN |
|---|---|---|---|---|---|---|
| 07A | 3-26-15 | TWV | MACA | KRKE | BOM ADJUSTMENT; REVISED NOTES. | 10101-25 |
| 06D | 4-22-13 | BAME | RYB | CMK | REVISED AND REDRAWN; ALL PREVIOUS REVS OMITTED<br>REVISED TITLE BLOCK | 10101-25 |

TITLE

# WMPHF2E HORIZONTAL MANAGER

CUSTOMER DRAWING

ITEM REVISION NAME: V10101WF/07

DATASET FILE NAME: V10101WF_DC/07A

UNLESS OTHERWISE SPECIFIED, DIMENSIONAL TOLERANCES ARE: IN [mm]

.X ± .XXX ±

.XX ± ANGLES ±

THIRD ANGLE PROJECTION

MATERIAL: ABS

DRAWING NUMBER: 10101-25

| DRAWN BY | DATE | CHK | SCALE | SHT 1 OF 1 | SIZE |
|---|---|---|---|---|---|
| JDWE | 12-17-02 | MECA | NONE | | A |

D10100DA/15