Chipsmall Limited consists of a professional team with an average of over 10 year of expertise in the distribution of electronic components. Based in Hongkong, we have already established firm and mutual-benefit business relationships with customers from,Europe,America and south Asia,supplying obsolete and hard-to-find components to meet their specific needs.

With the principle of “Quality Parts,Customers Priority,Honest Operation,and Considerate Service”,our business mainly focus on the distribution of electronic components. Line cards we deal with include Microchip,ALPS,ROHM,Xilinx,Pulse,ON,Everlight and Freescale. Main products comprise IC,Modules,Potentiometer,IC Socket,Relay,Connector.Our parts cover such applications as commercial,industrial, and automotives areas.

We are looking forward to setting up business relationship with you and hope to provide you with the best service and solution. Let us make a better world for our industry!

Contact us

Tel: +86-755-8981 8866 Fax: +86-755-8427 6832
Email & Skype: info@chipsmall.com Web: www.chipsmall.com
Address: A1208, Overseas Decoration Building, #122 Zhenhua RD., Futian, Shenzhen, China

図面番号(DRAWING NO.) SJ111875

版数 VER.	年月日 DATE	CN NO.	変更内容 DESCRIPTION	製図 DR.	担当 CHK.	査閲 APPD.	承認 APPD.
2	22/MAR/2012	002137	REVISED PLATING INDICATION. ADDED ITEM.	J.ICHIYAMA	H.MATSUZAKI	T.NISHIMURA	H.OBIKANE
3	02/NOV/2012	004406	ADDED ITEM.	—	H.MATSUZAKI	T.NISHIMURA	H.OBIKANE
4	28/FEB/2013	005530	ADDED ITEM.	—	H.MATSUZAKI	T.NISHIMURA	H.OBIKANE
5	29/MAR/2013	005869	ADDED ITEM.	—	H.MATSUZAKI	T.NISHIMURA	H.OBIKANE

WISDOM承認 2013/04/01

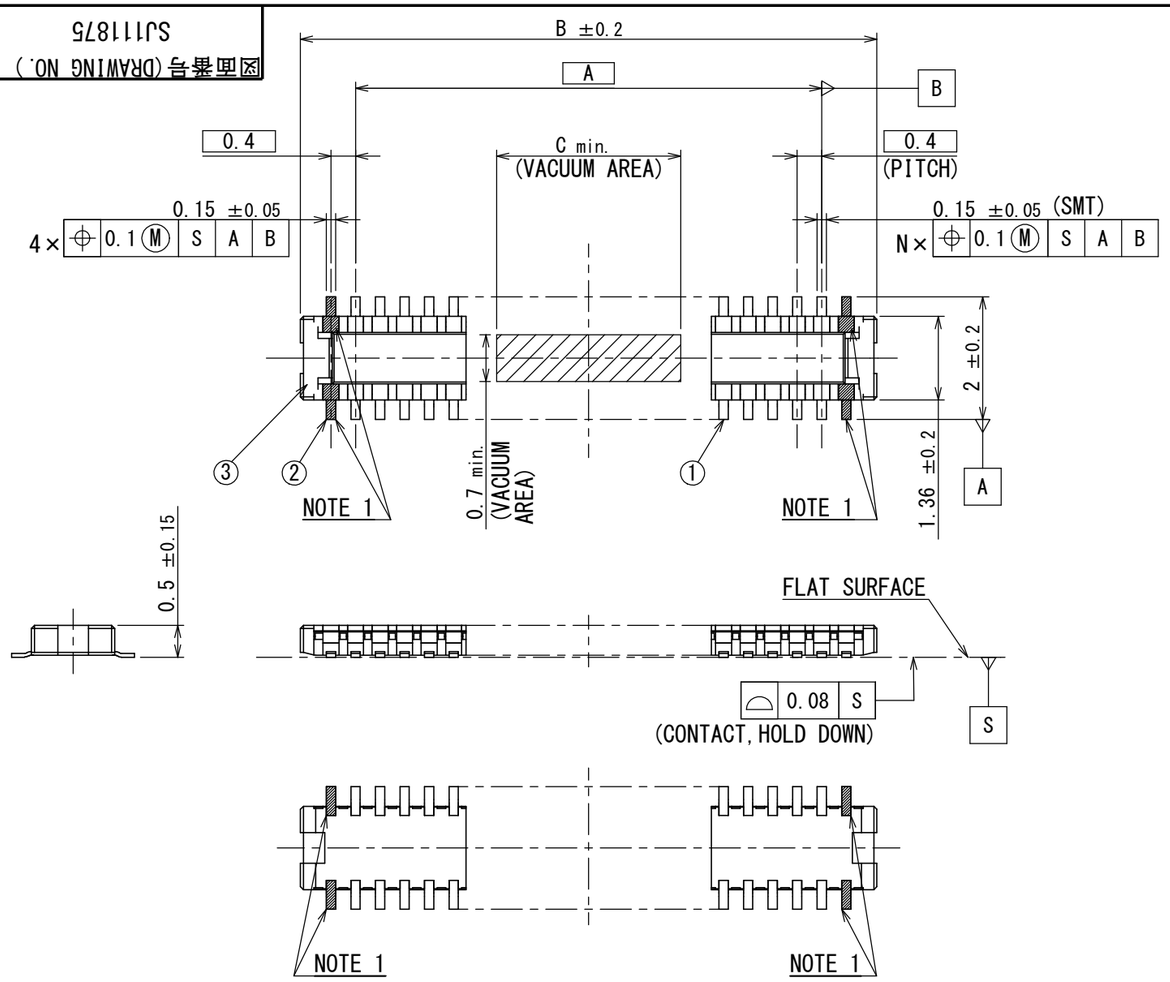

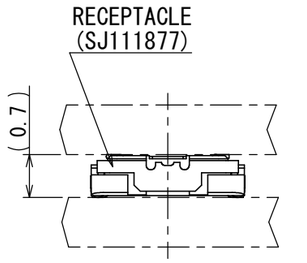

MATED CONDITION(REF.)
嵌合状態図(参考)

TABLE 1

	DIMENSIONS 寸法 / NOMBER OF CONTACT 芯数	A	B	C
	10	1.6	3.4	2.0
△5	16	2.8	4.6	2.0
	20	3.6	5.4	2.0
△2	22	4.0	5.8	2.0
△3	24	4.4	6.2	2.0
△3	26	4.8	6.6	5.0
	28	5.2	7.0	5.0
△3	30	5.6	7.4	5.0
△4	32	6.0	7.8	5.0

NOTE 1. MECHANICAL HOLD DOWNS IN FOUR CORNERS. (NOT FOR ELECTRICAL CONNECTION).
X PIN CONNECTOR HAS X+4 PIN CONTACTS. e.g. 10 PIN CONNECTOR HAS 14 PIN.
NOTE 2. IT SHOULD BE 3±0.05 IF REPAIRING IS NEEDED.

注 1. 四隅はホールドダウンである。(電気的接続不可)
例：10(N)芯のコネクタは、10(N+4)芯分のSMT端子を保有する。
注 2. リペアーが必要な場合、この寸法は3±0.05を推奨する。

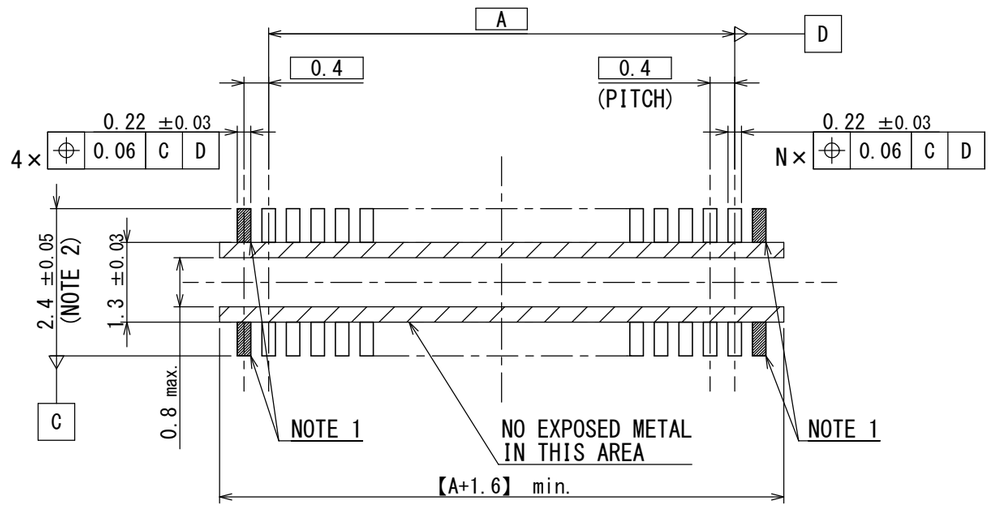

APPLICABLE P.C.B DIMENSION(REF.)
適合基板寸法(参考)

符号 NO.	名称 DESCRIPTION	個数 QTY.	材料 MATERIAL	仕上 FINISH	備考 REMARKS
3	INSULATOR インシュレータ	1	HEAT RESISTING PLASTICS 耐熱プラスチック	—	—
2	HOLD DOWN ホールドダウン	4	COPPER ALLOY 銅合金	GOLD PLATING OVER NICKEL Ni上Auめっき △2	TERMINAL AREA : GOLD(0.05μm MIN) △2
1	CONTACT コンタクト	N	COPPER ALLOY 銅合金	GOLD PLATING OVER NICKEL Ni上Auめっき △2	CONTACT AREA : GOLD(0.1μm MIN) △2 TERMINAL AREA : GOLD(0.05μm MIN)

仕様書(SPECIFICATION) JACS-10814

第1版(ORIGINAL DATE) 16/JUN/2011

製図 DR. —

担当 CHK. H.MATSUZAKI

査閲 APPD. T.NISHIMURA

承認 APPD. H.OBIKANE

一般公差(GENERAL TOLERANCE)

寸法(DIMENSION): . ± / .× ± / .×× ± / .××× ±

角度(ANGLES): ×° ± / ×°×' ±

単位(UNIT) : mm

尺度(SCALE) 10:1

シリーズ(SERIES) WP7

名称(TITLE) WP7-P***VA1

質量(MASS) —

日本航空電子工業株式会社
JAPAN AVIATION ELECTRONICS INDUSTRY, LTD.

図面番号(DRAWING NO.) SJ111875

SIZE A3

版数(VER.) 5

JAE-CONNECTOR.COM
Reference Only

DCF-C-212H(12.08)

S/W

JAE Connector DIV. Proprietary.Copyright(C) 2011, Japan Aviation Electronics Industry, LTD.