Chipsmall Limited consists of a professional team with an average of over 10 year of expertise in the distribution of electronic components. Based in Hongkong, we have already established firm and mutual-benefit business relationships with customers from,Europe,America and south Asia,supplying obsolete and hard-to-find components to meet their specific needs.

With the principle of “Quality Parts,Customers Priority,Honest Operation,and Considerate Service”,our business mainly focus on the distribution of electronic components. Line cards we deal with include Microchip,ALPS,ROHM,Xilinx,Pulse,ON,Everlight and Freescale. Main products comprise IC,Modules,Potentiometer,IC Socket,Relay,Connector.Our parts cover such applications as commercial,industrial, and automotives areas.

We are looking forward to setting up business relationship with you and hope to provide you with the best service and solution. Let us make a better world for our industry!

Contact us

Tel: +86-755-8981 8866 Fax: +86-755-8427 6832
Email & Skype: info@chipsmall.com Web: www.chipsmall.com
Address: A1208, Overseas Decoration Building, #122 Zhenhua RD., Futian, Shenzhen, China

SPECIFICATIONS

PARAMETERS	VALUES	UNITS
RATED VOLTAGE	32	Vdc
OPERATING VOLTAGE RANGE	3 ~ 32	Vdc
RATED CURRENT (MAX)	21	mA
MINIMUM SPL @ 10 CM	95	dBA
RESONANT FREQUENCY	2,800 ± 500	Hz
TONE OR PULSE RATE	FAST PULSE	3 pulse /sec
OPERATING TEMPERATURE	-30 ~ +80	°C
STORAGE TEMPERATURE	-40 ~ +80	°C
HOUSING MATERIAL	ABS	-
TERMINAL MATERIAL	Sn PLATED BRONZE	-
WEIGHT	18.5	grams

THIS DOCUMENT CONTAINS DATA PROPRIETARY TO PROJECTS UNLIMITED, INC. ANY USE OR REPRODUCTION, IN ANY FORM, WITHOUT PRIOR WRITTEN PERMISSION OF PROJECTS UNLIMITED, INC. IS PROHIBITED.
©2003, Projects Unlimited Inc.

REVISION HISTORY

LTR	DESCRIPTION	DATE	APPROVED
-	RELEASED FROM ENGINEERING	5/17/2006	
A	REVISED TO INVENTOR 3-D DRAWING TEMPLATE	6/1/2010	B.R.

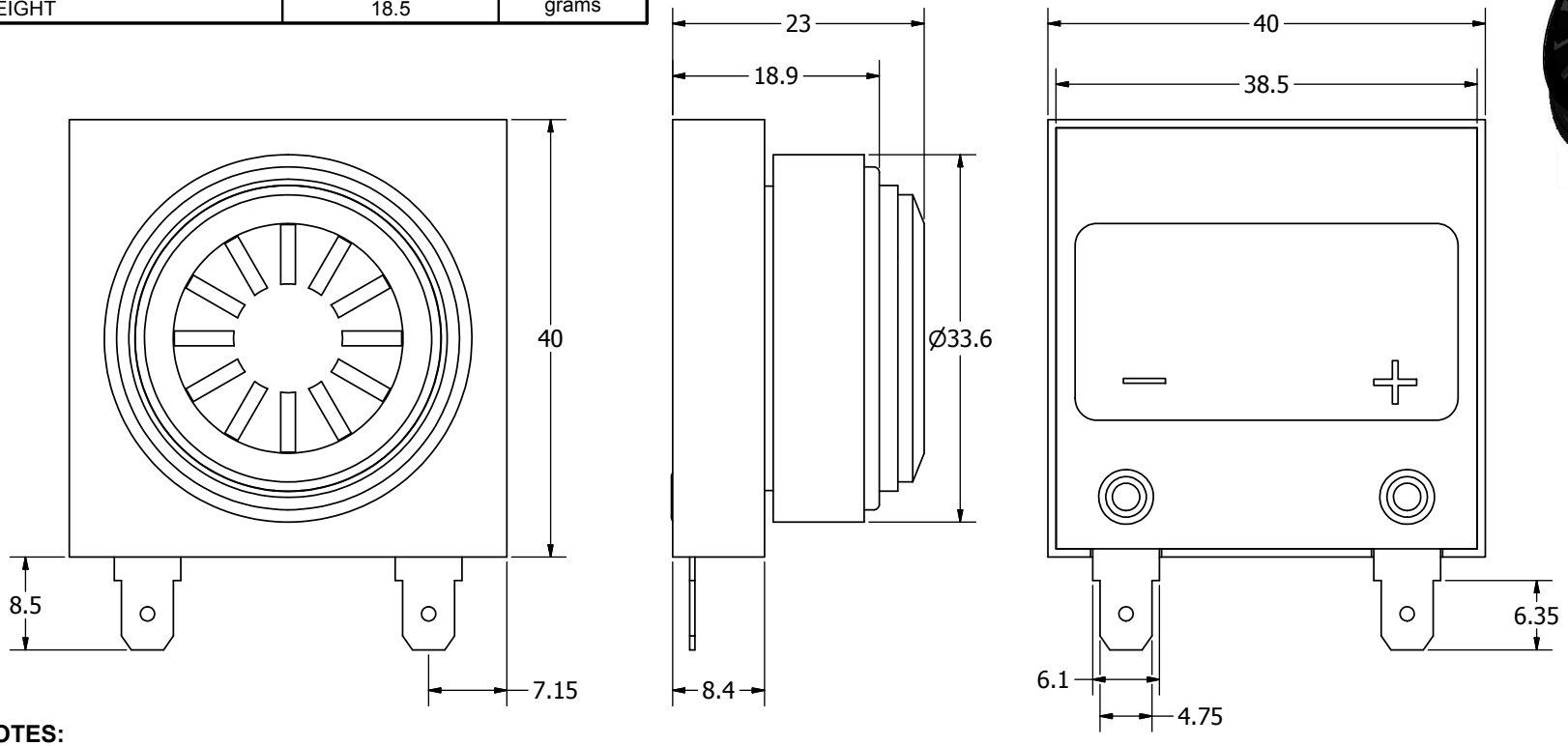

NOTES:

1. ALL DIMENSIONS ARE IN MILLIMETERS.
2. SPECIFICATIONS SUBJECT TO CHANGE OR WITHDRAWL WITHOUT NOTICE.
3. THIS PART IS RoHS 2002/95/EC COMPLIANT.

UNLESS OTHERWISE SPECIFIED:
DIMENSIONS ARE IN MILLIMETERS,
TOLERANCES ARE ±0.5 AND ANGLES ARE ±3°.

SIZE A3

X-4035-P-FP32-R.idw

Designed by	Date	Checked by	Date	Approved by	Date	Drawn Date
J.D.	5/17/2006	E.P.	5/17/2006	B.R.	5/17/2006	6/1/2010

pui audio inc
a projects unlimited company

X-4035-P-FP32-R

Indicator

Edition: -

Sheet: 1 / 1