Chipsmall Limited consists of a professional team with an average of over 10 year of expertise in the distribution of electronic components. Based in Hongkong, we have already established firm and mutual-benefit business relationships with customers from,Europe,America and south Asia,supplying obsolete and hard-to-find components to meet their specific needs.

With the principle of “Quality Parts,Customers Priority,Honest Operation,and Considerate Service”,our business mainly focus on the distribution of electronic components. Line cards we deal with include Microchip,ALPS,ROHM,Xilinx,Pulse,ON,Everlight and Freescale. Main products comprise IC,Modules,Potentiometer,IC Socket,Relay,Connector.Our parts cover such applications as commercial,industrial, and automotives areas.

We are looking forward to setting up business relationship with you and hope to provide you with the best service and solution. Let us make a better world for our industry!

Contact us

Tel: +86-755-8981 8866 Fax: +86-755-8427 6832
Email & Skype: info@chipsmall.com Web: www.chipsmall.com
Address: A1208, Overseas Decoration Building, #122 Zhenhua RD., Futian, Shenzhen, China

XTC7006

26.00000 MHz TCXO

- ***Temperature Compensated Crystal Oscillator***
- ***Miniature 3.2 x 2.5 mm SMD Package***
- ***Excellent Frequency Stability***
- ***Low Phase Noise***
- ***Complies with Directive 2002/95/EC (RoHS)***

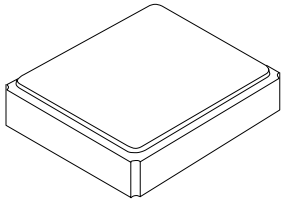

4-Terminal SMD Case

Electrical Characteristics

Characteristic	Sym	Notes	Minimum	Typical	Maximum	Units
Nominal Frequency	F_O			26.00000		MHz
Storage Temperature Range in Tape and Reel			-30		+85	°C
Operating Temperature Range			-30		+85	°C
Power Supply Voltage	V_{DD}		2.7	3.0	3.3	V
Output Voltage with 10 pF ‖10 KΩ Load	V_{OUT}		0.8			V_{P-P}
Output Waveform			Clipped Sinewave			
Power Supply Current	I_{DD}				1.5	mA
Frequency Tolerance after Reflow			±2 ppm maximum @ 25 ±3 °C			
Frequency Stability versus:						
Temperature, -30 to 85 °C					±0.5	ppm
Load Variation, 10 pF ‖ 10 KΩ ±10%					±0.2	ppm
Supply Voltage, 3.00 V ±5%					±0.2	ppm
Frequency Slope (one measurement at least every 2 °C)			±0.3 ppm/°C maximum, -30 to 80 °C			
Start Up Time, 90% of Final RF level in V_{P-P}					2.0	ms
Harmonics					-7.0	dBc
Aging at 25 °C					±1.0	ppm/yr
Phase Noise @ 1 kHz carrier offset					-130	dBc/Hz
Stanard Shipping Quantity on 180 mm (7") Reel				1000		units
Lid Symbolization (in addition to Lot and/or Date Codes)	Line1: 7006 Line2: YWWS					

Pin Connections

Connection	Terminals
Ground	1
Ground	2
TCXO Output	3
V_{DD}	4

CAUTION: Electrostatic Sensitive Device. Observe precautions for handling.

Notes:

1. The design, manufacturing process, and specifications of this device are subject to change without notice.

4-Terminal Surface-Mount Seam Weld Case

3.2 x 2.5 mm Nominal Footprint

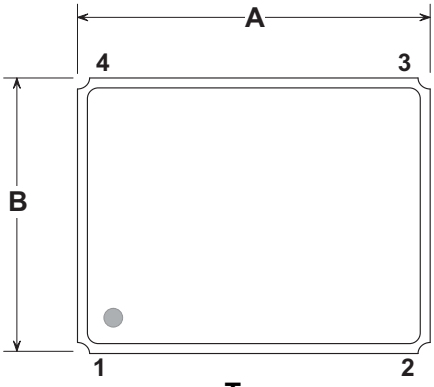

Top

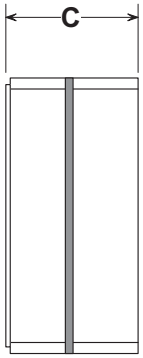

Side

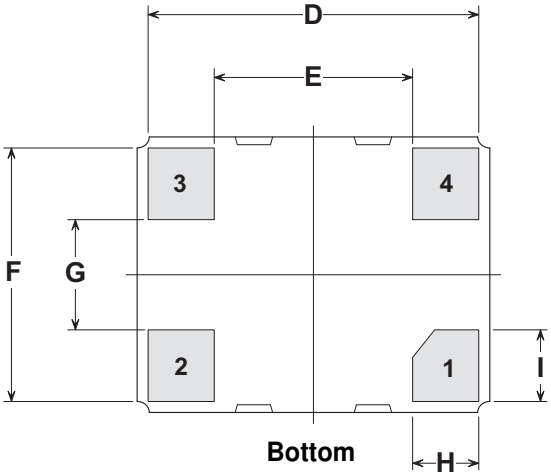

Bottom

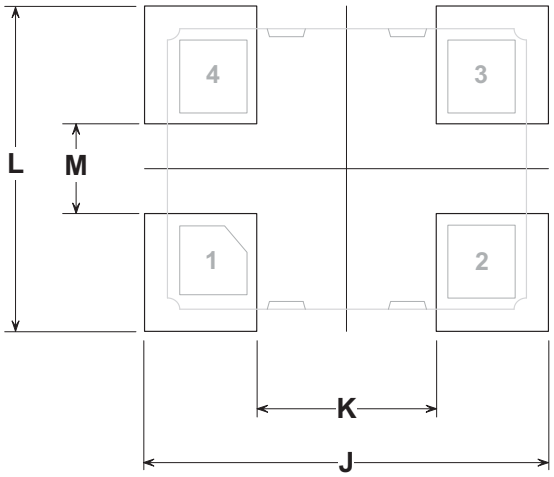

PCB Land Pattern
(Top View)

Case and PCB Land Dimensions

Dimension	mm			Inches		
	Min	Nom	Max	Min	Nom	Max
A	3.00	3.20	3.40	0.118	0.126	0.134
B	2.30	2.50	2.70	0.091	0.098	0.106
C	-	-	1.20	-	-	0.047
D	-	3.08	-	-	0.121	-
E	-	1.80	-	-	0.071	-
F	-	2.38	-	-	0.094	-
G	-	1.00	-	-	0.039	-
H	-	0.60	-	-	0.024	-
I	-	0.65	-	-	0.026	-
J	-	3.60	-	-	0.142	-
K	-	1.60	-	-	0.063	-
L	-	2.90	-	-	0.114	-
M	-	0.80	-	-	0.031	-

Case Materials

Materials	
Solder Pad Plating	0.3 to 1.0 µm Gold over 1.27 to 8.89 µm Nickel
Lid Plating	2.0 to 3.0 µm Nickel
Body	Al_2O_3 Ceramic
Pb Free	

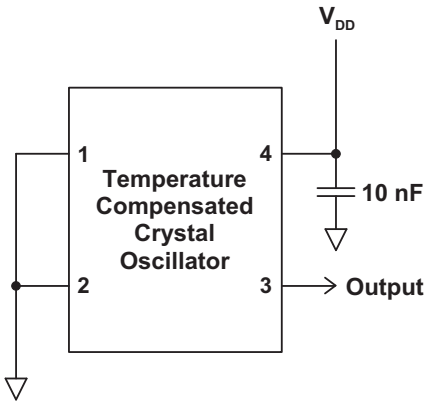

TCXO Application Circuit

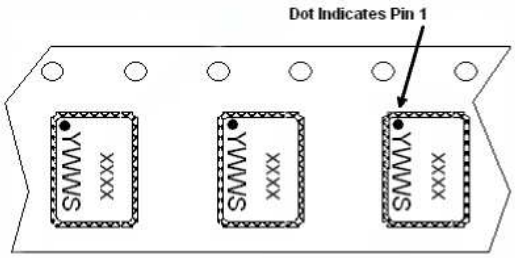

Package Orientation in Carrier Tape

Reel Dimensions

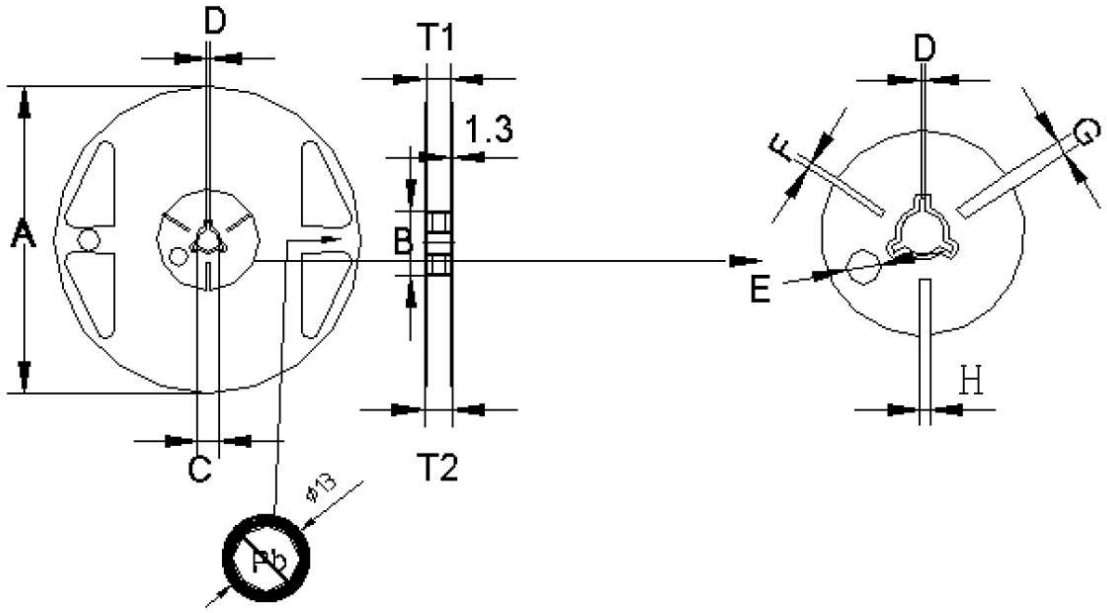

mm	A	B	C	D	E	F	G	H	T1	T2	T3
Dimension	180	60	13.0	2.0	9.1	2.9	4.9	3.9	9.0	11.4	1.2
Tolerance	±1.0	+1.0/-0.0	±0.2	±0.5	±0.5	±0.5	±0.5	±0.5	±0.3	±1.0	±0.1

Tape Dimensions

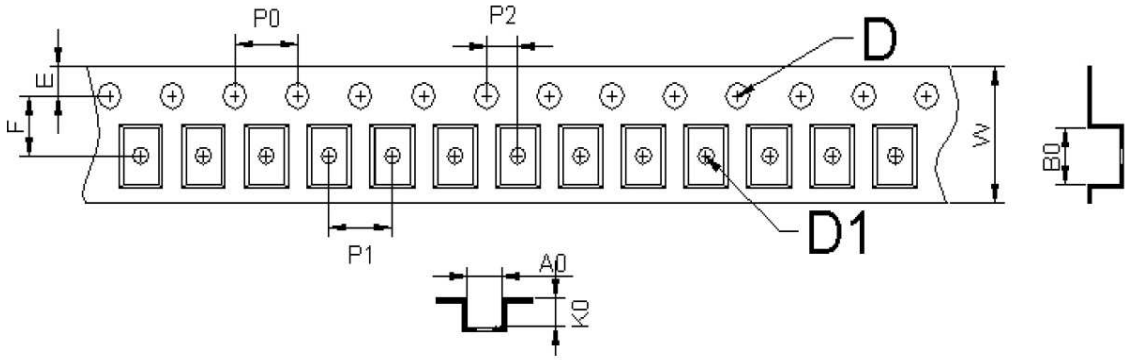

mm	A0	B0	W	F	E	P0	P1	P2	D1	D	K0	t
Dimension	2.80	3.71	8.00	3.50	1.75	4.00	4.00	2.00	1.50	1.00	1.75	0.25
Tolerance	±0.10	±0.10	+0.30/-0.10	±0.05	±0.10	±0.10	±0.10	±0.05	+0.10/-0.00	+0.25/-0.00	±0.10	±0.02

Typical Solder Reflow Profile