Chipsmall Limited consists of a professional team with an average of over 10 year of expertise in the distribution of electronic components. Based in Hongkong, we have already established firm and mutual-benefit business relationships with customers from,Europe,America and south Asia,supplying obsolete and hard-to-find components to meet their specific needs.

With the principle of “Quality Parts,Customers Priority,Honest Operation,and Considerate Service”,our business mainly focus on the distribution of electronic components. Line cards we deal with include Microchip,ALPS,ROHM,Xilinx,Pulse,ON,Everlight and Freescale. Main products comprise IC,Modules,Potentiometer,IC Socket,Relay,Connector.Our parts cover such applications as commercial,industrial, and automotives areas.

We are looking forward to setting up business relationship with you and hope to provide you with the best service and solution. Let us make a better world for our industry!

Contact us

Tel: +86-755-8981 8866 Fax: +86-755-8427 6832
Email & Skype: info@chipsmall.com Web: www.chipsmall.com
Address: A1208, Overseas Decoration Building, #122 Zhenhua RD., Futian, Shenzhen, China

Copyright FCI.

FCIconnect.com

PRODUCT NUMBER	PITCH
YGxx01x100J0G	5.00mm

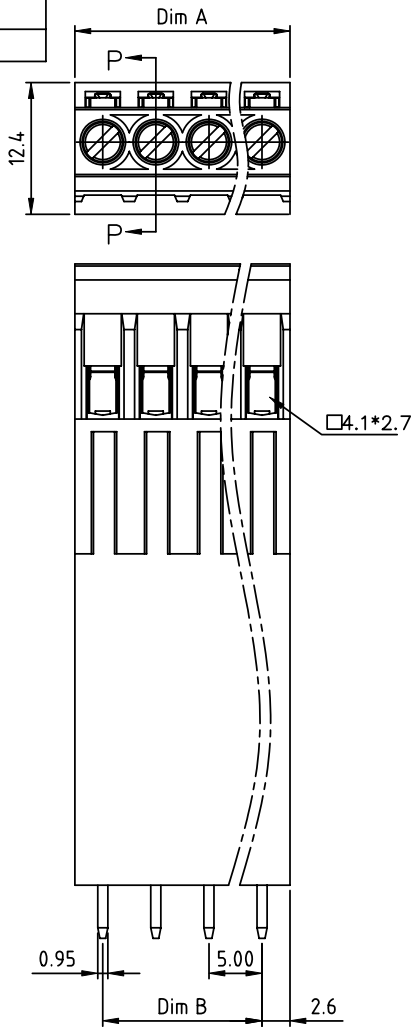

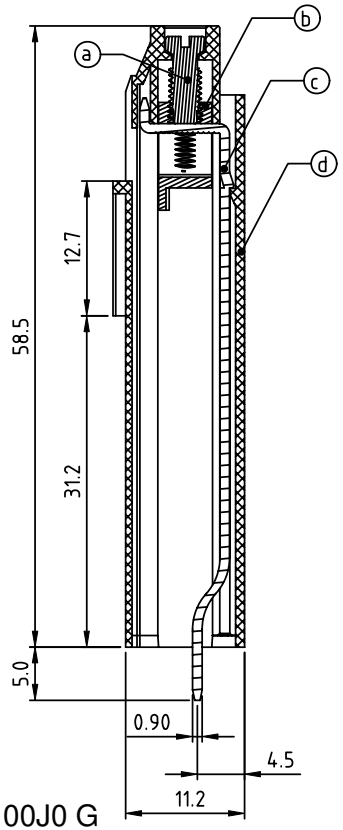

SECTION P-P

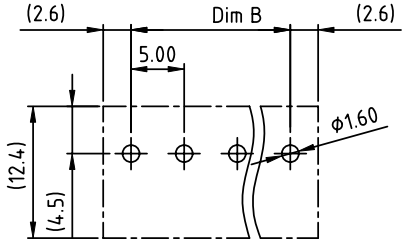

RECOMMENTED P.C.B LAYOUT
TOP VIEW

Material

- Item ⓐTerminal screw: Steel Zinc plating "-" slot type
- Item ⓑClamp : Brass , Ni plating
- Item ⓒSolder pin : Brass,Tin plated
- Item ⓓTerminal housing : Thermoplastic (UL94V-0)

Electrical

- Voltage rating: 300VAC
- Current rating: 15A
- Wire range:
- Solid wire(AWG): 12-28
- Stranded wire(AWG): 12-28
- Torque(Lb-In): 4.3
- Screw: M3
- Wire strip length: 7-8mm
- Withstanding Voltage: 1.6KV
- Operating temperature: -40°C to +115°C
- Soldering temperature: 260°C±5°C/5 Sec

PART NO.: YG xx 0 1 x 1 00J0 G

N = Number of poles
Dim A=Nx5.0+0.25
Dim B=(N-1)x5.0

Poles	DimA&B Tolerance
2p-6p	±0.20
7p-12p	±0.30
13p-18p	±0.40
19p-24p	±0.50

Solid block
No. of poles
02 2 poles
03 3 poles
... ...
24 24 poles

Color
0 Black (RAL9005)
2 Red (RAL3001/D)
3 Orange(RAL2011/P)
4 Yellow(RAL1018/A)
5 Green(RAL6018/T)
6 Blue (RAL5015/A)
8 Grey(RAL7035/D)
9 White(RAL1102)
C Green(RAL6018/U)

RoHS compliant
(lead<4%)
In copper Alloy

mat'l. code				surface ASME Y14.5	tolerance ASME Y14.5	projection	product family TERMINAL BLOCK
ltr	ecn no	dr	date	tolerances unless otherwise specified			title
				angles	linear X.±0.5	MM	TERMINAL BLOCK
					X.X±0.3		RISING CLAMP,180D WIRE INLET,SOLID BLOCK
				X°±1°	X.XX±0.1	scale	
				dr	EVIN ZHONG 041014		dwg no YGxx01x100J0G sheet 1 of 1 size A4
				engr	EVIN ZHONG 041014		
				chr	HANKE FENG 041014		
				appd	SHI JUN 041014		type CUSTOMER Drawing
sheet index	revision	A					
	sheet	1					