Chipsmall Limited consists of a professional team with an average of over 10 year of expertise in the distribution of electronic components. Based in Hongkong, we have already established firm and mutual-benefit business relationships with customers from,Europe,America and south Asia,supplying obsolete and hard-to-find components to meet their specific needs.

With the principle of “Quality Parts,Customers Priority,Honest Operation,and Considerate Service”,our business mainly focus on the distribution of electronic components. Line cards we deal with include Microchip,ALPS,ROHM,Xilinx,Pulse,ON,Everlight and Freescale. Main products comprise IC,Modules,Potentiometer,IC Socket,Relay,Connector.Our parts cover such applications as commercial,industrial, and automotives areas.

We are looking forward to setting up business relationship with you and hope to provide you with the best service and solution. Let us make a better world for our industry!

Contact us

Tel: +86-755-8981 8866 Fax: +86-755-8427 6832
Email & Skype: info@chipsmall.com Web: www.chipsmall.com
Address: A1208, Overseas Decoration Building, #122 Zhenhua RD., Futian, Shenzhen, China

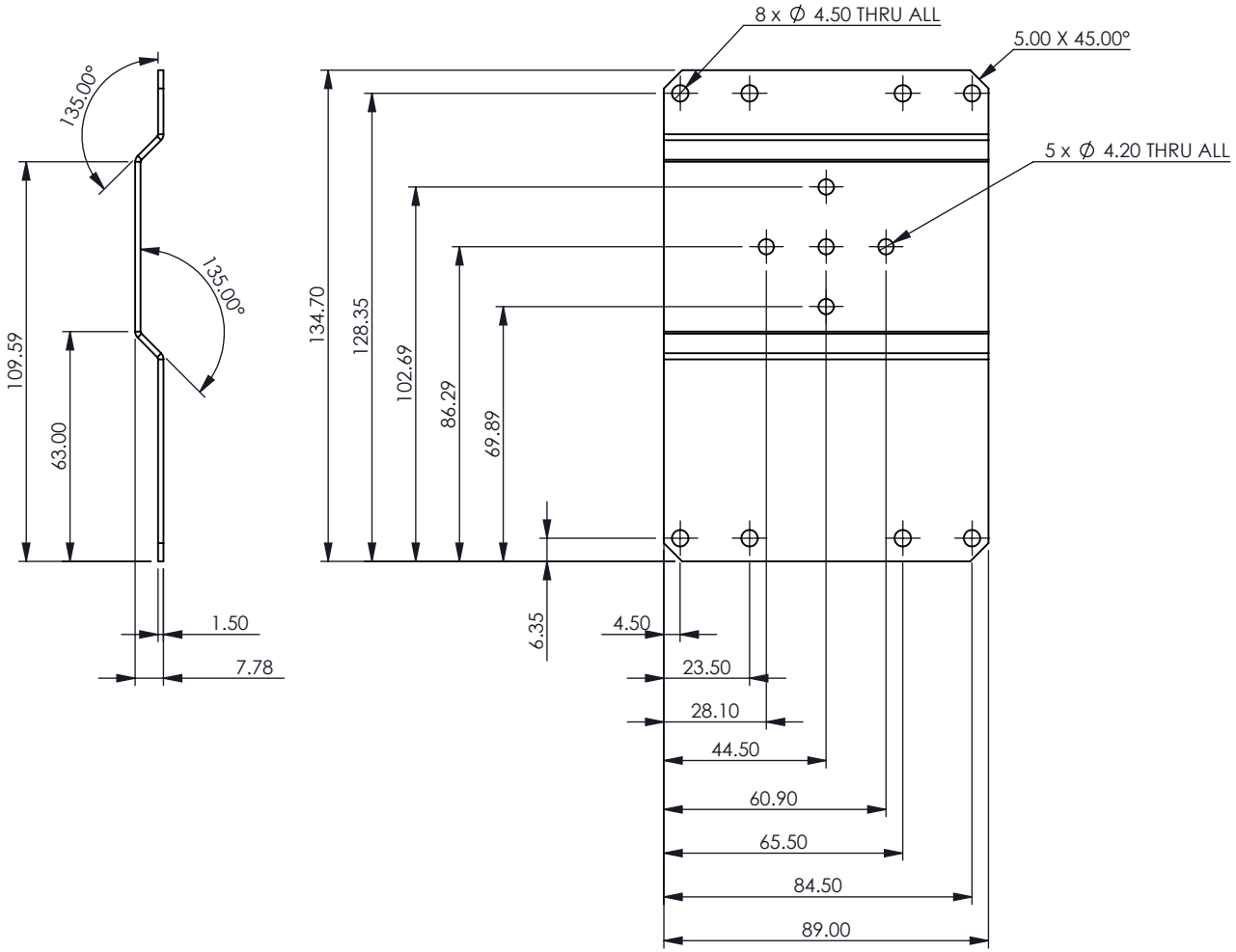

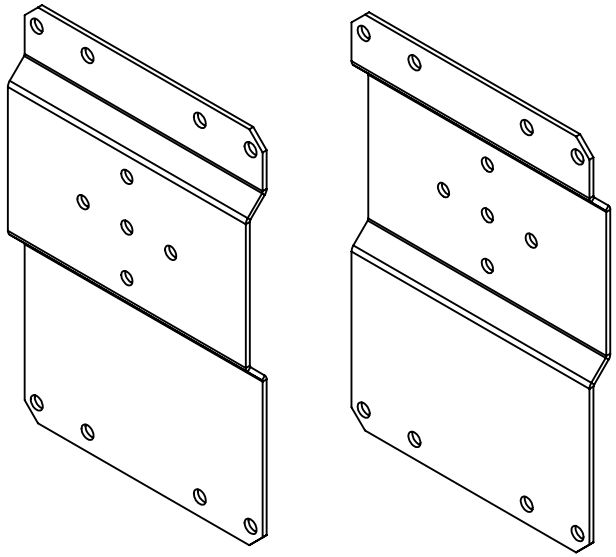

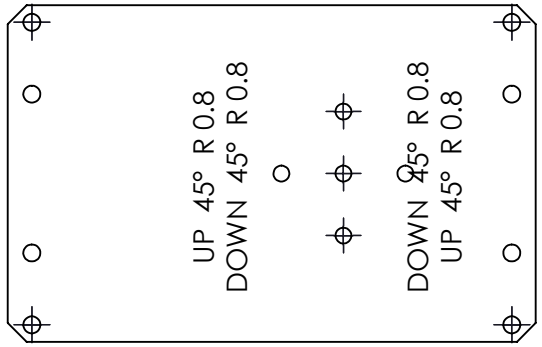

FLAT PATTERN
(FOR REFERENCE
PURPOSES ONLY)

NOTES:
1. MATERIAL 5251 H22 ALUMINIUM.
2. REMOVE AND DEBURR ALL SHARP EDGES.
3. PARTS MUST BE FREE OF OIL, GREASE & OTHER FOREIGN MATERIALS.
4. FINISH - CLEAR ANODISE 5-15um TO ISO 7599.

REV	ECN #	PREPARED	DATE	CHECKED	DATE
------	------	------	------	------	------
------	------	------	------	------	------
------	------	------	------	------	------
------	------	------	------	------	------
------	------	------	------	------	------

TOLERANCES unless otherwise stated according to DIN ISO 2768-1/-2 CLASS m/K. ALL DIMENSIONS IN mm.	MATERIAL 5251 H22 ALUMINIUM	DOCUMENT NO.	TITLE			TITLE (SHORT FORM)	EXCELSYS TECHNOLOGIES LTD.
		61693r00	GENERIC DINRAIL LOCATING FIXTURE			----	27 EASTGATE DRIVE, EASTGATE BUSINESS PARK, LITTLE ISLAND, CORK, IRELAND. (T) +353 21 4354716 (F) +353 21 4354864 (WEB) www.excelsys.com
	FINISH CLEAR ANODISE		PREPARED	DATE	CHECKED	DATE	RELEASED	DATE
	SCALE: NOT TO SCALE	ORIGINAL :	TH	21/10/15	--------	-----	--------	-----	PAGE OF -----

This document and its contents are the copyright property of Excelsys Technologies Ltd. and may not be copied in whole or in part without written permission.