Chipsmall Limited consists of a professional team with an average of over 10 year of expertise in the distribution of electronic components. Based in Hongkong, we have already established firm and mutual-benefit business relationships with customers from,Europe,America and south Asia,supplying obsolete and hard-to-find components to meet their specific needs.

With the principle of “Quality Parts,Customers Priority,Honest Operation,and Considerate Service”,our business mainly focus on the distribution of electronic components. Line cards we deal with include Microchip,ALPS,ROHM,Xilinx,Pulse,ON,Everlight and Freescale. Main products comprise IC,Modules,Potentiometer,IC Socket,Relay,Connector.Our parts cover such applications as commercial,industrial, and automotives areas.

We are looking forward to setting up business relationship with you and hope to provide you with the best service and solution. Let us make a better world for our industry!

Contact us

Tel: +86-755-8981 8866 Fax: +86-755-8427 6832
Email & Skype: info@chipsmall.com Web: www.chipsmall.com
Address: A1208, Overseas Decoration Building, #122 Zhenhua RD., Futian, Shenzhen, China

Date	SYM	REVISION RECORD	AUTH	DR.	CK.
8/04/07	A	Added wire gauge	T.B.	B.S.	
10/06/07	B	Added "ROHS COMPLIANT"	T.B.	B.S.	

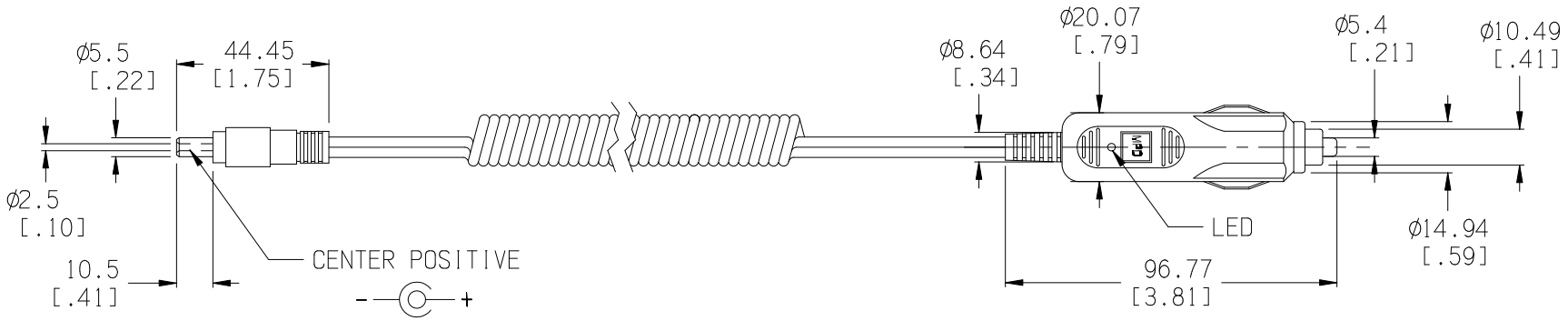

ROHS COMPLIANT

BILL OF MATERIAL

PART #	QTY.	DESCRIPTION
APP-001	1	CIGARETTE PLUG FOR 21 OR 22.2mm DIA. SOCKETS
PLUG	1	DC MOLDED PLUG, 2.5 x 5.5mm
FUSE	1	3AG (6.35 x 30mm), 5 AMP.
CORD	1	20 AWG CORD, STRAND 12/30, NOMINAL OD 3.2x6.4

Tolerance (Inches)

Decimal ±.5 (.020)

Fractional ± .8 (.030)

Angular ± 3°

Memory Protection Devices, Inc

200 Broad Hollow Road, Farmingdale, New York 11735

Scale

Drawn By B.S.

Approved By T.B.

Title

12' AUTO POWER COIL CORD SET WITH 2.5mm DC PLUG

Date 10/06/07

Drawing Number ZA5074-2.5