Chipsmall Limited consists of a professional team with an average of over 10 year of expertise in the distribution of electronic components. Based in Hongkong, we have already established firm and mutual-benefit business relationships with customers from,Europe,America and south Asia,supplying obsolete and hard-to-find components to meet their specific needs.

With the principle of “Quality Parts,Customers Priority,Honest Operation,and Considerate Service”,our business mainly focus on the distribution of electronic components. Line cards we deal with include Microchip,ALPS,ROHM,Xilinx,Pulse,ON,Everlight and Freescale. Main products comprise IC,Modules,Potentiometer,IC Socket,Relay,Connector.Our parts cover such applications as commercial,industrial, and automotives areas.

We are looking forward to setting up business relationship with you and hope to provide you with the best service and solution. Let us make a better world for our industry!

Contact us

Tel: +86-755-8981 8866 Fax: +86-755-8427 6832
Email & Skype: info@chipsmall.com Web: www.chipsmall.com
Address: A1208, Overseas Decoration Building, #122 Zhenhua RD., Futian, Shenzhen, China

SPECIFICATIONS

Manual Insertion Type Magnetic Card Reader

ZU–1870MU

NOTE:

APPROVAL

Panasonic Communications Co.,Ltd.
Devices and Components Company

2111 Ueda, Usa City, Oita 879-0493,
JAPAN

REF No.	MIS-DG60B136	REV A

DATE	
PREPARED	
LAWS	
APPROVED	
Q A	
SALES	

Copyright © 2006 Panasonic / Panasonic Communications Co., Ltd. All rights reserved.
Panasonic is a registered trademark of Matsushita Electric Industrial Co., Ltd.
Other company, product, and service names may be trademarks or service marks of others.

Revision History

Document No.	Date	Description	Page
MIS-DG60B136	25.APR.2006	Initial version	ALL
MIS-DG60B136A	8.JUN.2006	· Changed the bezel (Changed the physical dimension) · Separated the SG and the FG	3,10 6

Note: No part of this document may be reproduced or transmitted in any form or by any means, electronic or mechanical, for any purpose, without the express written permission of Panasonic Communications Co., Ltd.
In case there is any contradiction appeared based on technical standard change/update etc., our specifications shall take precedence over such change/update.

Table of Contents

1. Introduction 3

2. Product Name and Model # 3

3. Equipment Specification 3
- 3.1. Basic features 3
- 3.2. Electrical specification 3
- 3.3. Physical dimension 3

4. Environments 3

5. Card Specification 5
- 5.1. Magnetic reading 5
- 5.2. Physical characteristics 6
- 5.3. Magnetic characteristics 6

6. Terminal No. of connector 6

7. Interface specification 7
- 7.1. Configuration Properties 7
- 7.2. Message Format 7

8. Unit life and reliability 8

9. Period of guarantee 8

10. Maintenance 8

11. Precautions 8
- 11.1. Handling 8
- 11.2. Cautions 8

12. Appearance 10

© 2006 Panasonic Communications Co., Ltd.

1. Introduction

This specification describes Panasonic's Manual Insertion Type Magnetic Card Reader Model # ZU-1890MU2.

Features of the reader are as follows:

- This card reader has the USB (Keyboard Emulation) interface.
- Communications with a Host Computer through USB connection.
- Reads Track 1 and Track 2 of standard Magnetic Stripe Cards per ISO standards.
- Can use standard Windows drivers for communications. No third part device driver is required.
- Raindrop proof design (IPX4)

2. Product Name and Model

Product Name:	Manual insertion type magnetic card reader with USB
Model #:	ZU-1870MU
Support Operating System:	Microsoft© Windows© XP Home/Professional Edition

3. Equipment Specification

3.1. Basic features

Card operating speed:	10 cm/s ～ 120 cm/s
Card operation:	Insertion / Ejection (Data is transmitted as keyboard data after inserting a card and ejecting a card from a card reader. Refer to 7)
Read/Write:	Read only
Magnetic Head:	Double sided heads

3.2. Electrical specification

Power supply:	DC 5 V ± 0.25 V
Current consumption:	40 mA max.

3.3. Physical dimension

Width:	99.4 mm
Depth:	122.0 mm
Height:	80.0 mm
Weight:	Approx. 140 g

4. Environments

Operating temperature range:	0 °C ~ 60 °C
Storage temperature range:	-30 °C ~ 70 ℃
Operating humidity range:	10 % ~ 90 % RH (No condensation allowed)
Storage humidity range:	10 %～95 % RH (No condensation allowed)

© 2006 Panasonic Communications Co., Ltd.

Environment requirements	Outdoor acceptable under following condition Note)This card reader is designed to have water protection level IPX4. To achieve the level for this card reader, card readerrequires sealing the bezel to the main unit (Customer box) by utilizing a sealant or gasket on the bezel. Such sealing must prevent main body of this card reader from being exposed to moisture. Main unit (Customer box) that card reader is installed must be sealed with the internal temperature, humidity and etc. meeting this specification.

© 2006 Panasonic Communications Co., Ltd.

5. Card Specification

5.1. Magnetic reading

Card standard:

Card standard	ISO1	ISO2
Track used	Track 1st	Track 2nd
Recording method	F2F	F2F
Recording density	210 BPI	75 BPI
Recording capacity	79 characters (7 bit code)	40 characters (5 bit code)

Dimensions in millimeters

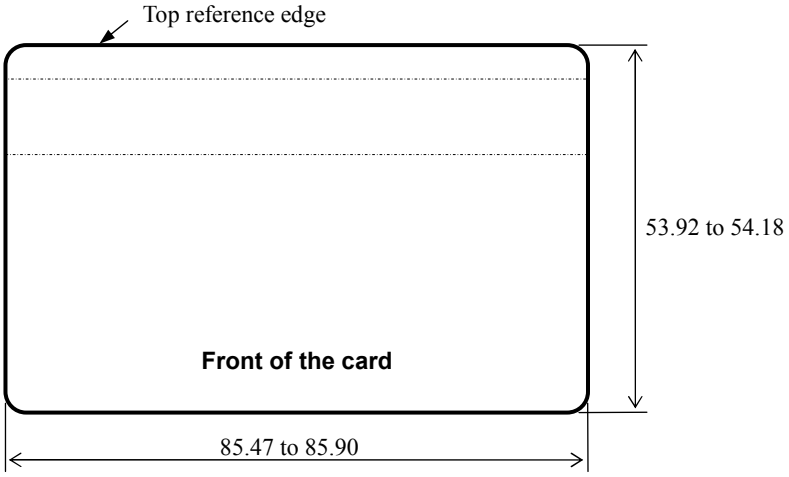

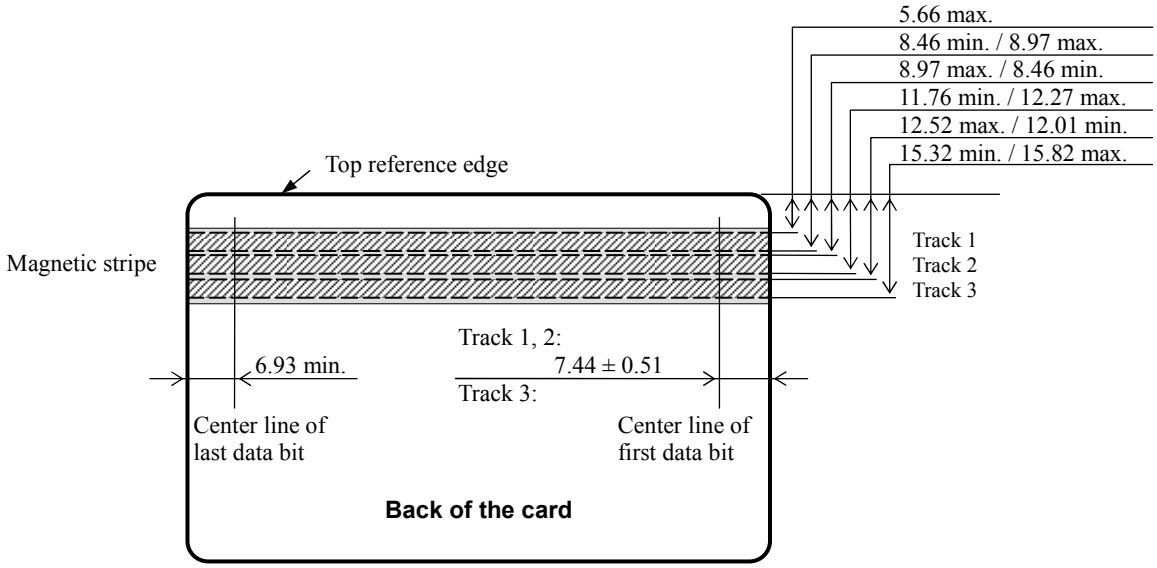

5.2. Physical characteristics

Thickness: 0.76 mm (tolerance ± 0.08 mm)
Warpage: 2.5 mm max. (Include relief height of embossed characters)

5.3. Magnetic characteristics

Coercive force (Hc): 2.4×10^4 A/m to 2.4×10^5 A/m
Residual flux (¢r): 1.25 Maxwell/cm ± 0.15 Maxwell/cm
Squareness ratio (¢r/¢m): More than 0.70

6. Terminal No. of connector

Pin No. & Signal Name:
Card reader side: 53261-0571 (Molex)

Connector Pin No.	Signal Name
1	+5V
2	D-
3	D+
4	SG
5	FG

Cable side:
Housing: 51021-05** (Molex)
Contact: 50079-81** (Molex)

© 2006 Panasonic Communications Co., Ltd.

7. Interface specification

This card reader compatible with USB specification revision 1.1 and Human Interface Device (HID) class specification version 1.1. The reader communicates to the host as Human Interface Device (HID) keyboard. Microsoft Windows XP Home/Professional Edition operating system has a standard USB HID keyboard device driver.
This card reader is a low speed USB device.
Data is transmitted as keyboard data after inserting a card and ejecting a card from a card reader.
In case of reading error occurs during a card insertion, reading is tried again during a card ejection.

The reader can not transmit card data to keyboard code correctly in case of following:

- Operating system other than U.S. version
- On states Caps lock key or Num lock key
- Card is read during keyboard input

7.1. Configuration Properties

Configuration properties of USB descriptors as follows:

Vendor ID:	0x04da
Product ID:	0x117c
Transfer Type:	Interrupt
Max Packet Size:	8 bytes
Polling Interval:	10 msec

7.2. Message Format

Track 1			Track 2			<CR>	
T1SS	**T1Data**	**ES**	**T2SS**	**T2Data**	**ES**	**LRC**	**CR**
“%”	Any	“?”	“;”	Any	“?”	(2 byte)	(carriage return)

where:

T1SS	“%” (Track 1 start sentinel)
T2SS	“;” (Track 2 start sentinel)
TnData	Track Data
ES	“?” (end sentinel)
LRC	Is the result of an EXCLUSIVE OR (XOR) between the start sentinel and the end sentinel. (ASCII Code)
CR	carriage return
SS	

example:

T1 and T2 card:

%	Track 1	?	;	Track 2	?	LRC	<CR>

T2 read error or T1 only card:

%	Track 1	?	LRC	<CR>

T1 read error or T2 only card:

;	Track 2	?	LRC	<CR>

T1 and T2 read error or data nothing: (no data)

8. Unit life and reliability

Magnetic head Life: 500,000 times pass

Note: The life is reliability number based on the result tested in a "clean office" environment.
Above life cycles are the numbers which are tested in a "clean office environment".
These numbers may be shortened dependent on the actual environment.
Especially in a dusty environment, even in the indoor application, dust or sand may shorten the life against the mechanical parts and most of the card transport mechanisms.*
In these case, warranty of the card reader may be void unless the proper protection and countermeasures are performed by the terminal side.
(e.g. If used in dusty conditions, the life of the magnetic head will decrease from 1/3 to 1/5 of the above values.)
**Dusty environment: Refer to ex.) IEC 68, EN30721-3-3 class 3S2 or worse.*

9. Period of guarantee

If defects should occur within one year after acceptance inspection of the machine due to improper material or workmanship, the defective parts shall be replaced or repaired, free of charge.

10. Maintenance

Because of difficulty in changing components on the P.C Board, replacement of whole unit is recommended for service and maintenance.

11. Precautions

Please be noted that we do not guarantee proper performance of the card reader if it is used other than the indicated specification range.

11.1. Handling

- Do not drop or give excessive shocks to this unit.
- Do not disassemble this unit.

11.2. Cautions

Card

- Be sure to use a card, which conforms for the card specification. (please refer to "5. Card specification" on page 2)
- Store the card carefully so as not to soil, injure or deform it. In particular, deposit of solid matter on the magnetic stripe surface may result in a trouble.

Cleaning

- Clean the magnetic head by periodically passing a cleaning card.
  For example, in a clean office room, pass the cleaning card about once a week.
  If the magnetic head is heavily stained, clean the head by soaking the cleaning card in alcohol properly and pass the card. For example, in the case that the card readers are used in the environment full of dust, please make a cleaning of the card reader with a cleaning card with alcohol everyday.

© 2006 Panasonic Communications Co., Ltd.

Installing

- Be sure to install on a flat surface so as to prevent any force to be applied to the card reader at the installation.
- In the case that it is to incorporate into a machine, be sure not to touch any part of machine structures to the flexible P.C.B.
- Especially, electric noise on this area should be avoided not cause reading error.
- Do not touch the printed circuit board with bare hand.
  Note: particularly static electricity.
- When installing the card reader, avoid dusty, hot or damp place, or near magnetic field or object generating inductive noise (printer, LED display unit, CRT, etc.).
  Avoid using the unit in a dusty place or otherwise the reading accuracy may be deteriorated. Keep the unit away from objects that generate magnetism.
  It may cause read errors and may cause damage to the magnetic card data.
- Do not supply power from other outlet than connector terminal.
  Pay special attention to the polarity of power source and wrong connection of connector.
- Do not use the unit in a place where it is exposed to direct sunlight or splashed by water.
- FG pin should be connected to FG at customer side in low impedance. In case that FG pin is not connected to FG, electrostatic resisting capability will decrease.

Others

- Check the noise, static electricity, etc., with the card reader being incorporated in the equipment.
  It is possible for the noise from the power supply to cause the reading errors.
  The equipment which the card reader is built in should be taken measures to reduce the noise from power supply.
- The operation guarantee temperature range is 0 °C to +60°C and humidity range is 10 % to 90 % RH. Do not use the unit if condensation gathers on it.
  We recommend you to use the card reader under the environmental condition of temperature +10 °C to +40 °C which is the best for transferring cards and reading data.
  Especially, in the condition of low temperature, provide heating system separately to warm up card reader.
- Do not give any vibration more than following conditions, when a card is in the card reader.
  Conditions: 5 Hz to 50 Hz , 10 m/s2 , sweep , 0.5 oct/min (X,Y,Z direction)
- Do not give any shock more than 100 m/s2 and more than 1 time, when a card is in the card reader.
- Card operation speed should be within the specification range.
  Forced stop or change of speed during the card operation may cause a read error.
  Appropriate speed to maintain stable operation is 30 cm/s ～ 60 cm/s.

© 2006 Panasonic Communications Co., Ltd.

12. Appearance

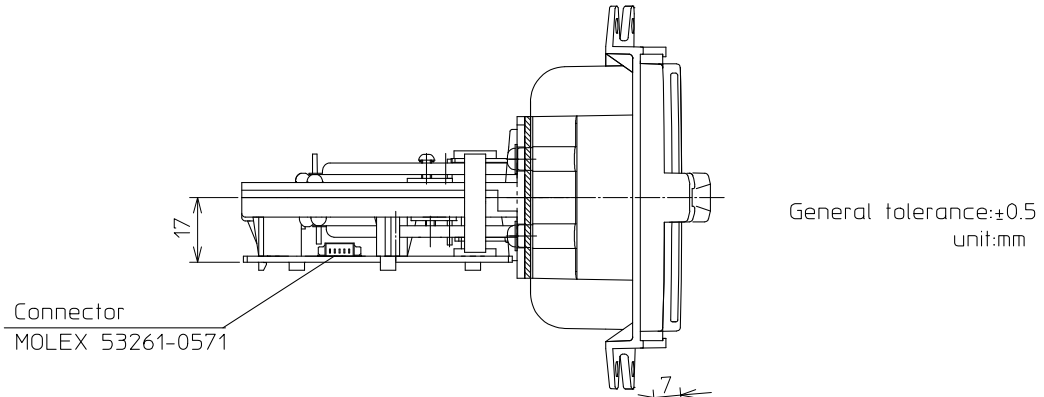

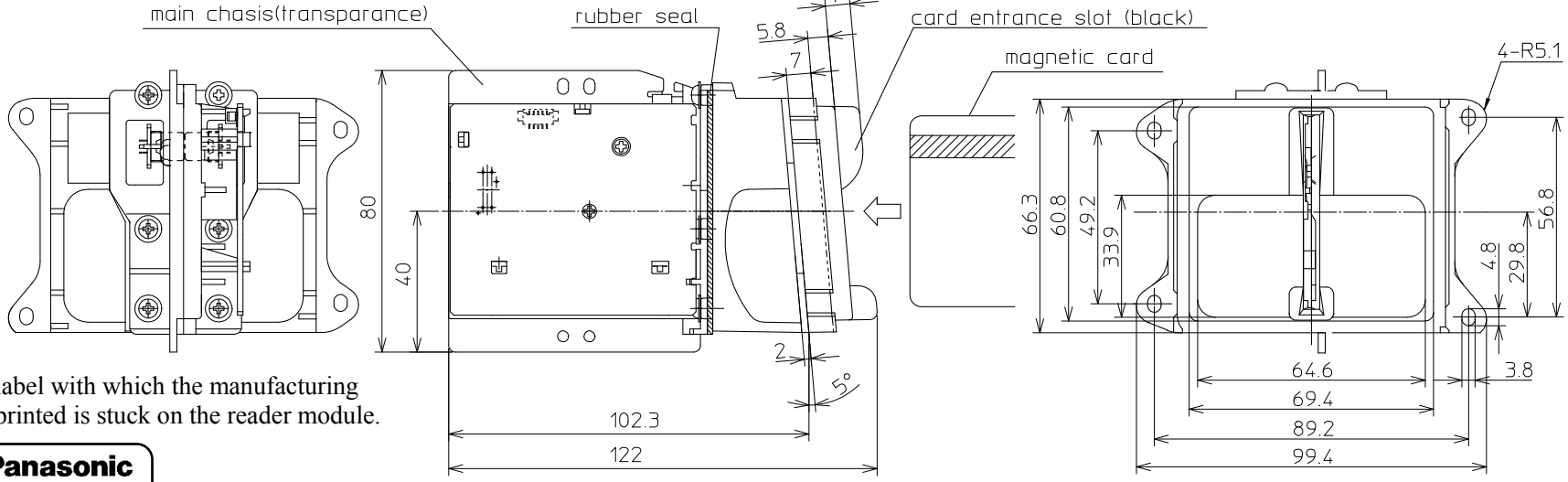

The product label with which the manufacturing number was printed is stuck on the reader module.

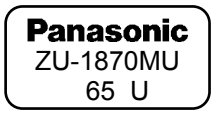

Manufactured month: January, February ... September = 1, 2 ... 9, October = O, November = N, December = D

Manufactured year: The last digit of the Christian era

© 2006 Panasonic Communications Co., Ltd.