Chipsmall Limited consists of a professional team with an average of over 10 year of expertise in the distribution of electronic components. Based in Hongkong, we have already established firm and mutual-benefit business relationships with customers from,Europe,America and south Asia,supplying obsolete and hard-to-find components to meet their specific needs.

With the principle of “Quality Parts,Customers Priority,Honest Operation,and Considerate Service”,our business mainly focus on the distribution of electronic components. Line cards we deal with include Microchip,ALPS,ROHM,Xilinx,Pulse,ON,Everlight and Freescale. Main products comprise IC,Modules,Potentiometer,IC Socket,Relay,Connector.Our parts cover such applications as commercial,industrial, and automotives areas.

We are looking forward to setting up business relationship with you and hope to provide you with the best service and solution. Let us make a better world for our industry!

# Contact us

Tel: +86-755-8981 8866 Fax: +86-755-8427 6832
Email & Skype: info@chipsmall.com Web: www.chipsmall.com
Address: A1208, Overseas Decoration Building, #122 Zhenhua RD., Futian, Shenzhen, China

Apr.1.2017 Copyright 2017 HIROSE ELECTRIC CO., LTD. All Rights Reserved.

## RECOMMENDED PANEL CUTOUT(4:1)

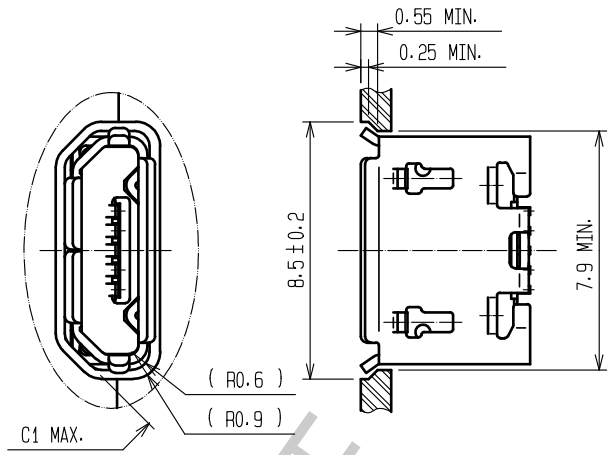


## MATED WITH CORRESPONDING PLUG(4:1)

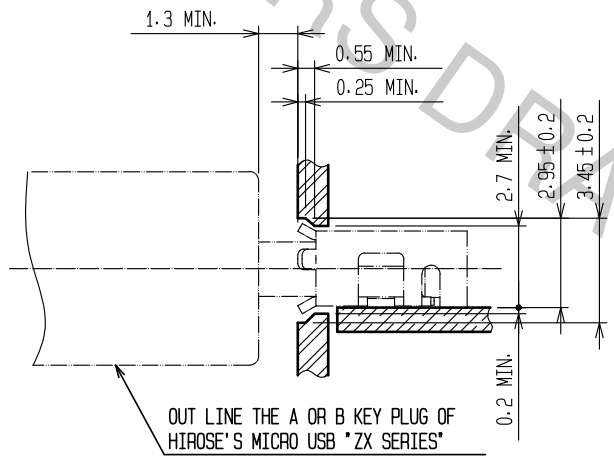


## RECOMMENDED PC BOARD PATTERN

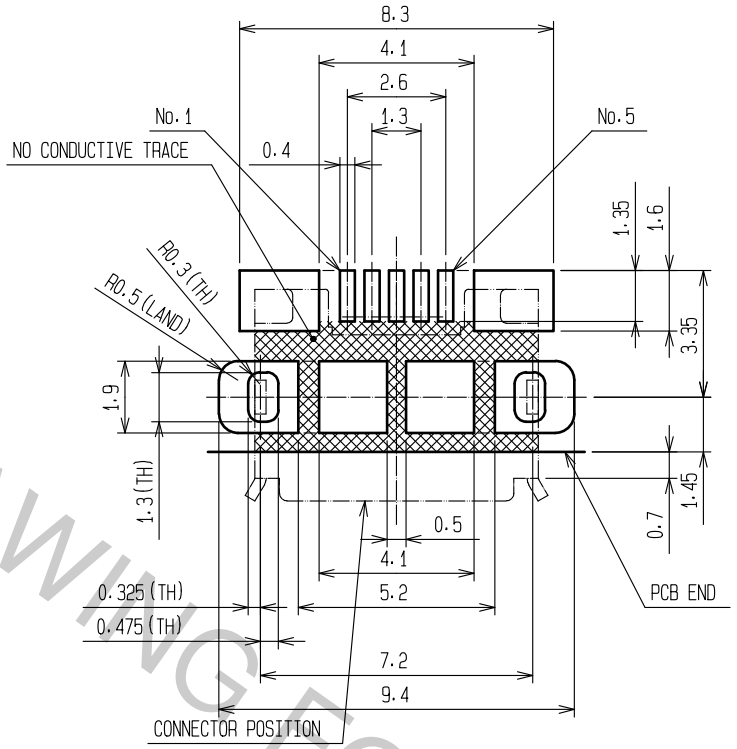


## 3 DRAWING FOR PACKING(FREE)

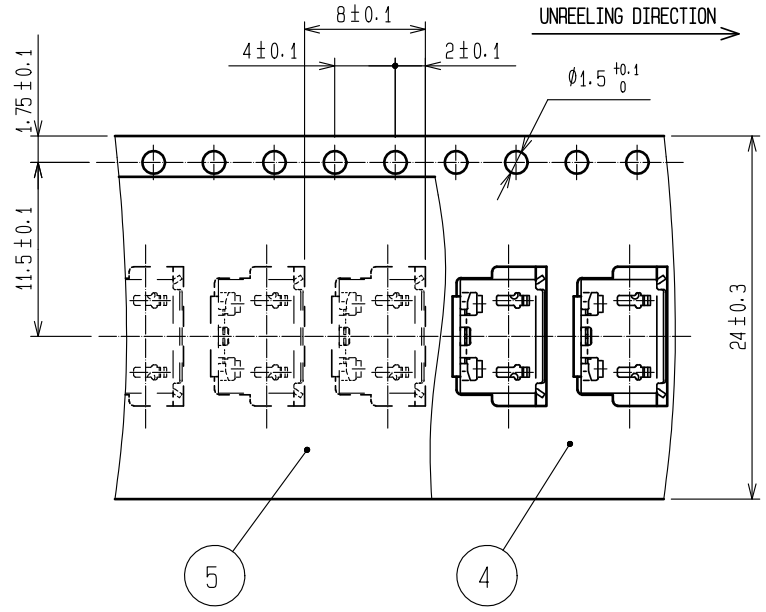


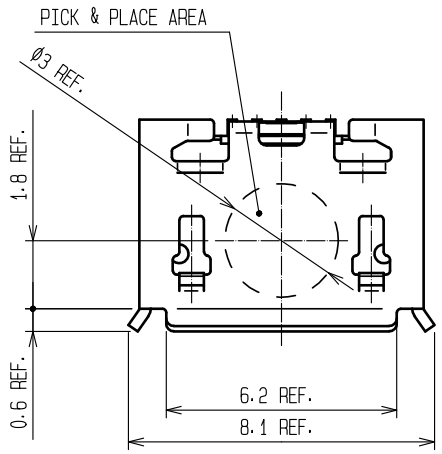


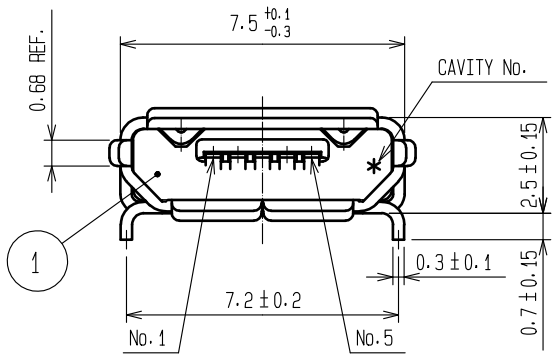


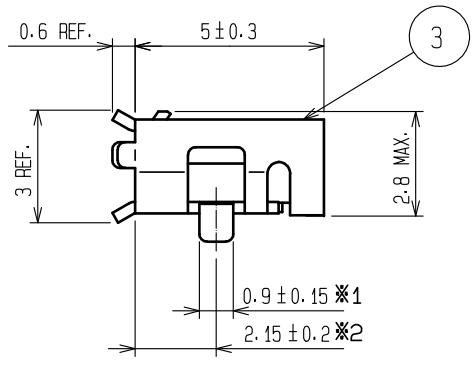


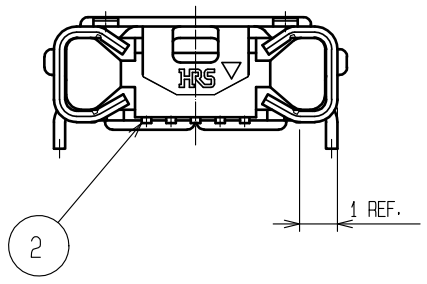


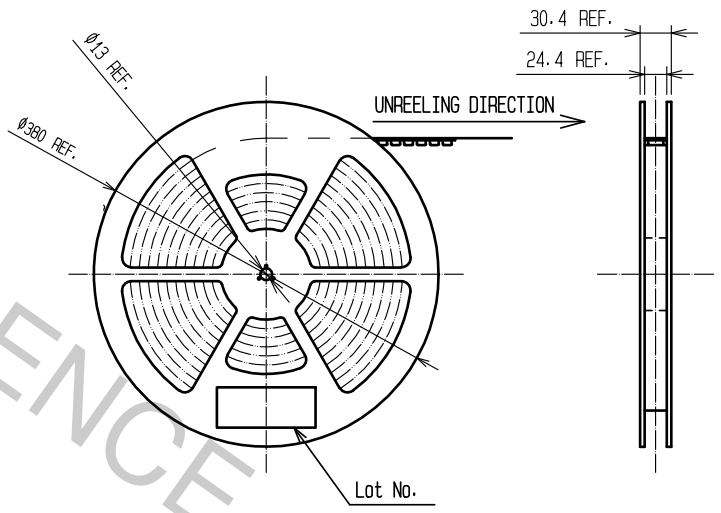


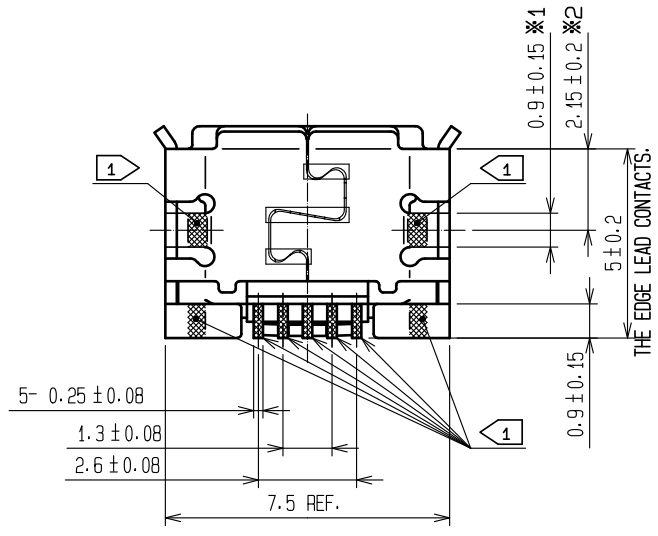


NOTES.

1. PARTS CO-PLANARITY IS WITHIN 0.08mm MAX.
2. PLATING
   CONTACT AREA : GOLD 0.75μm MIN.
   LEAD AREA : GOLD 0.05μm MIN.
   UNDER PLATING:NICKEL 2μm MIN.
3. PER REEL : 3000 pcs.
4. INTERFACE DIMENSIONS TO USB2.0 SPECIFICATION.
5. ※ INDICATES DUPLICATED DIMENSION.
6. AS FOR PART No.3, THE PERFORMANCE REMAINS GOOD EVEN IF THERE IS A RUBBING WOUND BY THE ASSEMBLY PROCESS.
7. AS FOR PART No.3, THERE IS NO PROBLEM ON THE QUALITY THOUGH THERE MIGHT BE A DIFFERENCE IN THE COLOR DEPENDING ON THE PLATING PROCESSING LOT.

| NO. | MATERIAL | FINISH , REMARKS |
|---|---|---|
| 2 | COPPER ALLOY | 2 |
| 1 | LCP | BLACK UL94V-0 |

| NO. | MATERIAL | FINISH , REMARKS |
|---|---|---|
| 5 | PE | |
| 4 | PS | |
| 3 | STAINLESS STEEL | TIN PLATING 1μm MIN. LUBRICANT |

| UNITS | SCALE | COUNT | DESCRIPTION OF REVISIONS | DESIGNED | CHECKED | DATE |
|---|---|---|---|---|---|---|
| mm | 5 : 1 | 0 | | | | |

HIROSE ELECTRIC CO., LTD.

| | | | |
|---|---|---|---|
| APPROVED | NM. NISHIMATSU | 15.10.27 | DRAWING NO. EDC-126572-30-00 |
| CHECKED | KN. ICHIKAWA | 15.10.27 | PART NO. ZX62D1-B-5PA(30) |
| DESIGNED | TS. ITO | 15.10.27 | CODE NO. CL242-0048-5-30 |
| DRAWN | AK. AKIYAMA | 15.10.27 | 0 1/1 |

HRS DRAWING FOR REFERENCE